Quass

Catalogue
01.2011

Mobile computer & printer accessories - Cases & Holsters

321 - cases, holsters and accessories for mobile computers, scaners, handhelds and printers

ARGOX, CASIO, CIPHERLAB, DATALOGIC, EXTECH, FUJITSU-SIEMENS, HONEYWELL, HTC, INTERMEC, LXE, MOBILE COMPIA, MOTION, MOTOROLA, NORDIC ID, OPTICON, PIDION, PRINTEK, PSC, PSION, TOHKEN, TWINHEAD, ZEBRA

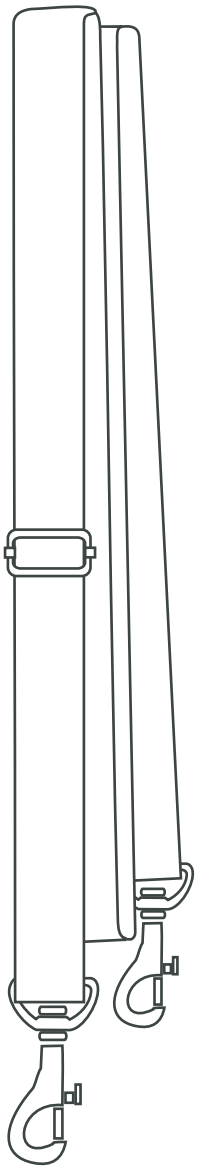

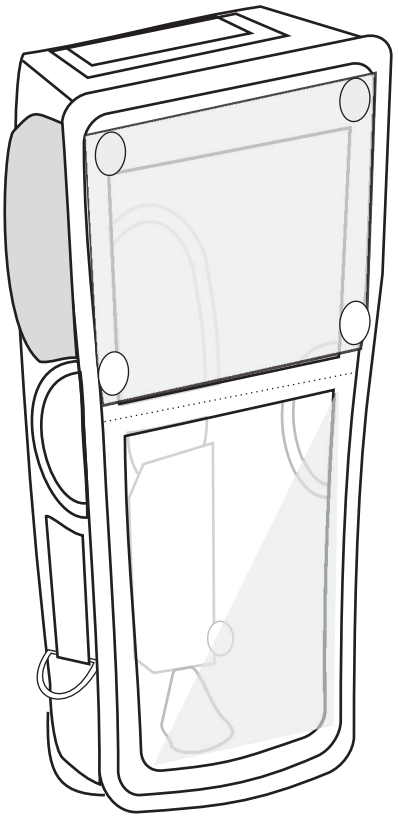

WHEN QUALITY DOES MATTER *** SINCE 1991 ***
Quass 7

Our products are protected by UE law as a Registered Community Designs

ARGOX

PT12 - page 34

CASIO

CASSIOPEA IT-600 - page 36
DT-X7 - page 35
DT-X10/X11 - page 35
DT-X30 - page 36
IT-3000 - page 37
IT-800 - page 37

CIPHERLAB

8001 - page 33

DATALOGIC

DRAGON M - page 29
GRYPHON I - page 30
JET - page 27
KYMAN - page 27, 28
MEMOR - page 28, 29
PEGASO (gun) - page 30
PEGASO (brick) - page 30
SKORPIO (gun) - page 27
SKORPIO (brick) - page 27
VIPER - page 26

EXTECH-ONIL

S4500THS,APEX 4 - page 45

FUJITSU-SIEMENS

P 1610 - page 38
P 1620 - page 38

HONEYWELL

DOLPHIN 6100 - page 44
DOLPHIN 6500 - page 44

HTC - page 34

INTERMEC

700 - page 23
CK 3 - page 22, 23
CK 30 - page 21
CK 31 - page 22
CK 60 - page 23
CK 61 - page 23
CK 31 - page 22
CK 60 - page 23
CK 61 - page 23
CN 2 - page 24
CN 3 - page 24
CN 3e - page 24
CN 50 - page 25
SF 51 - page 25
SR 61 - page 23

LXE

MX7 (gun) - page 42
MX8 (gun) - page 42
MX8 (brick) - page 42
MX9 (gun) - page 43
MX9 (brick) - page 43

MOBILE COMPIA

M3 - page 33
MC 7500S - page 33

MOTION

F5v - page 38

MOTOROLA (*SYMBOL*)

DS 3400 - page 20
DS 6708 - page 20
HC 700 - page 19
LS 2208 - page 20
LS 3400 - page 20
MC 30XX G (gun) - page 4
MC 30XX S/R (brick) - page 4, 5, 6
MC 35 - page 19
MC 50 - page 12
MC 55XX - page 12,13
MC 70 - page 14, 54
MC 75XX - page 15, 16
MC 75XX+Smart Card Reader page 17
MC 90XX G (gun) - page 10, 11
MC 90XX K (brick) - page 6, 7,8
MC 90XX K+ZEBRA printer page 6
MC 90XX S (short) - page 9
MC 95XX K (brick) - page 8
MT 20XX - page 20
PXXX - page 18
PDT 3146 - page 18
PDT 8100 - page 18
PPT 28XX - page 20

MOTOROLA (SYMBOL)

PPT 8800 - page 18
WSS 1000 - page 19
WT 40XX - page 19
VC 5090 - page 49

NORDIC ID

MORPHIC - page 41
PL 3000 - page 41
RF6XX - page 41

OPTICON

H19A - page 34

PIDION

BIP 5000 - page 32
BIP 7000 - page 32
BIP 7000 PLUS - page 32

PRINTEK

FIELDPRO - page 45
MtP 400 - page 45

PSC

FALCON 345 - page 31
FALCON 4220 - page 31
FALCON 4220 PDA - page 31
POWERSCAN - page 31

PSION TEKLOGIX

WORKABOUT PRO - page 39
WORKABOUT PRO 3 - page 40
IKON - page 40

TOHKEN

THIR 6000U - page 34

TWINHEAD

DIGIHEAL - page 34

XPLORE

TABLET - page 34

ZEBRA

110XiIII - page 47
170XiIII - page 47
P4T - page 46
QL 420 - page 46
RW 220 - page 46
RW 420 - page 46
S4M - page 47
Z4M / ZM400 - page 46,47
Z6M / ZM600 - page 46,47

ADDITIONAL ACCESSORIES page 48, 49,50

CODING SYSTEM - page 51, 52

GUIDE FOR 8114-Z CASE (Z-SYSTEM) page 53

SVM SYSTEM - page 53

3002 XPA (case datasheet) - page 54

7011-Z (case datasheet) - page 55

CODE INDEX - page 56-59

Motorola MC 30XX

TERMINAL CASE

3001

FOR ***MOTOROLA MC 30xx G***

TERMINAL CASE

3001-XPA

FOR ***MOTOROLA MC 30xx G***

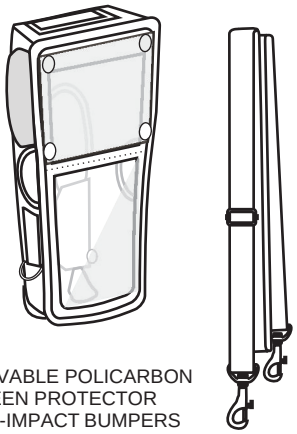

WITH MOVABLE POLICARBON
SCREEN PROTECTOR
AND ANTI-IMPACT BUMPERS

HOLSTER with 2 belts

8019

FOR MOTOROLA ***MC30xx G***
DATALOGIC SKORPIO GUN
DATALOGIC KYMAN
INTERMEC CK3
WITH PISTOL GRIP

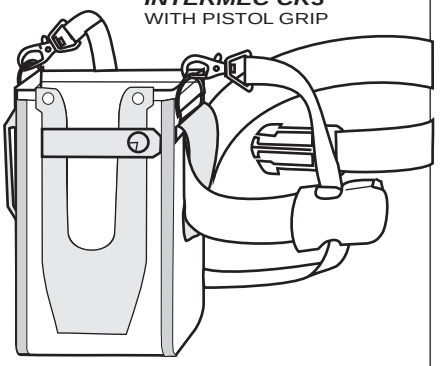

MC 30xx GUN

UNIVERSAL HOLSTER with 2 belts

8019-M

FOR MOTOROLA ***MC30xx G***
TIGHTLY FITTED

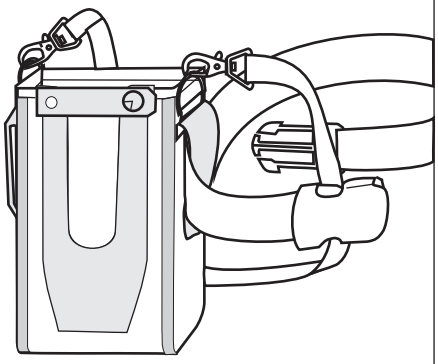

UNIVERSAL HOLSTER with 2 belts
and front pocket

8019-pocket

FOR MOTOROLA ***MC30xxG, DATALOGIC SKORPIO GUN, DATALOGIC KYMAN INTERMEC CK3*** WITH PISTOL GRIP

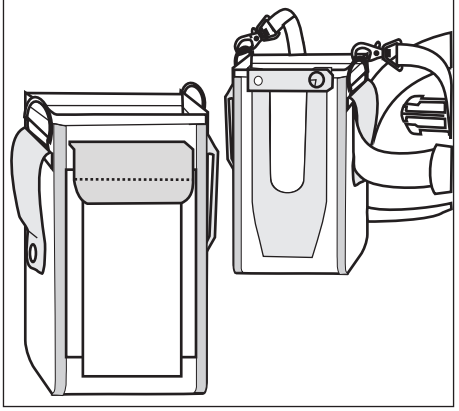

UNIVERSAL HOLSTER with 2 belts,
front pocket and belt stabilizer

8019-S-pocket

FOR MOTOROLAL ***MC30xxG, DATALOGIC SKORPIO GUN, DATALOGIC KYMAN INTERMEC CK3*** WITH PISTOL GRIP

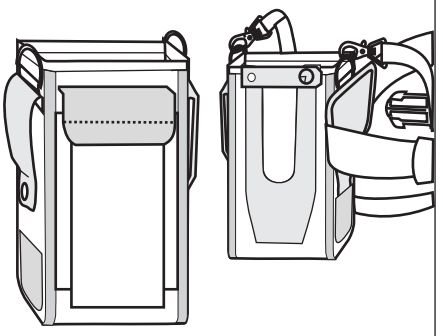

BELT STABILIZER INCLUDED

MC 30xx GUN

2-AXIES VEHICLE MOUNT HOLSTER

8019-SVM

FOR MOTOROLA ***MC30xx G***
DATALOGIC SKORPIO GUN
DATALOGIC KYMAN
INTERMEC CK3
WITH PISTOL GRIP

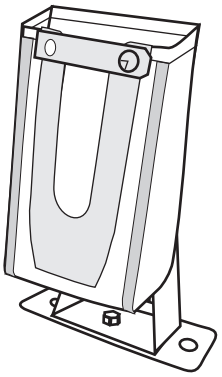

TERMINAL CASE

3002

FOR ***MOTOROLA MC 30XX***

TERMINAL CASE

3002-Z

FOR ***MOTOROLA MC 30XX***

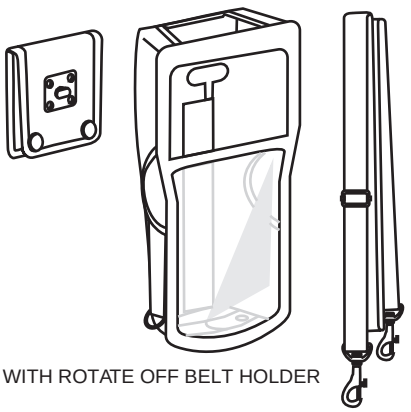

WITH ROTATE OFF BELT HOLDER

MC 30xx G MC 30xx S/R

Motorola MC 30XX

TERMINAL CASE

3002-ZP

FOR ***MOTOROLA MC 30XX***

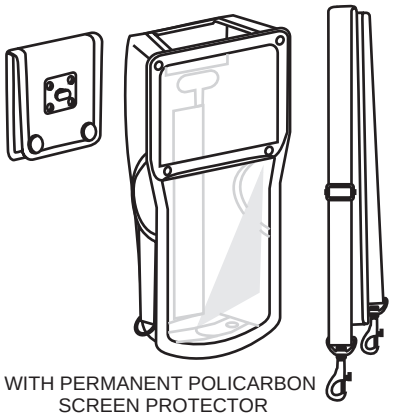

WITH PERMANENT POLICARBON SCREEN PROTECTOR AND ROTATE OFF BELT HOLDER

TERMINAL CASE

3002-XP

FOR ***MOTOROLA MC 30XX***

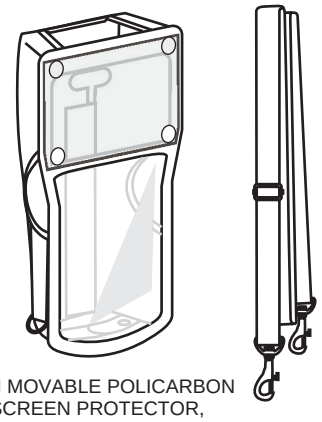

WITH MOVABLE POLICARBON SCREEN PROTECTOR,

TERMINAL CASE

3002-ZXPA

FOR ***MOTOROLA MC 30XX***

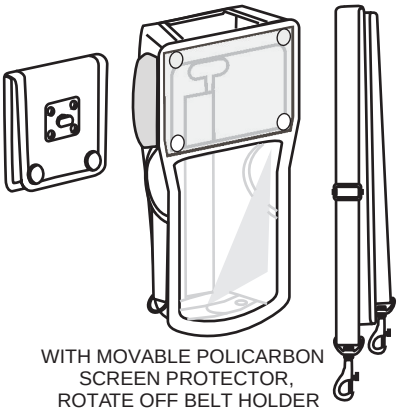

WITH MOVABLE POLICARBON SCREEN PROTECTOR, ROTATE OFF BELT HOLDER AND ANTI-IMPACT BUMPERS

MC 30xx S/R

TERMINAL CASE

3004

FOR MOTOROLA ***MC30XX*** SERIES

WITH EXTENDED BATTERY

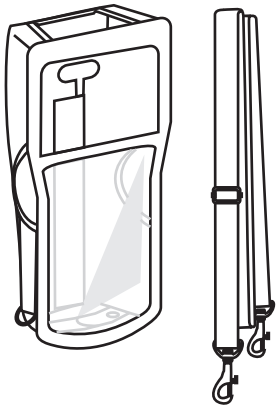

TERMINAL CASE

3004-PBF

FOR MOTOROLA ***MC30XX*** SERIES

WITH EXTENDED BATTERY

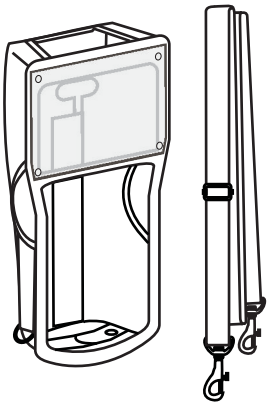

WITH POLICARBON WINDOW

MC 30xx S/R

HALF-CASE

3003-P

FOR MOTOROLA ***MC3070 R***

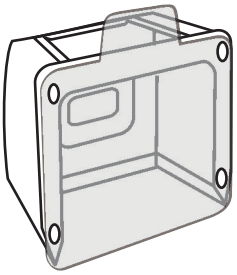

WITH SOLID POLICARBON SCREEN PROTECTOR

TERMINAL HOLSTER

8005

FOR ***MOTOROLA MC 3090 R***

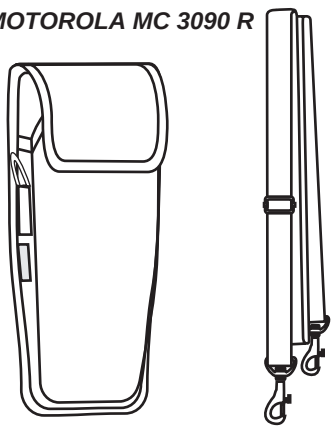

WITH MILITARY TYPE BELT HOLDER

TERMINAL HOLSTER

8005-B

FOR ***MOTOROLA MC 30xx R***

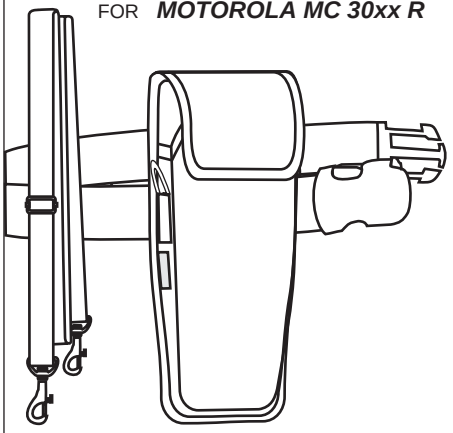

MC 30xx R

Motorola MC 30XX

TERMINAL HOLSTER

8016

FOR ***MOTOROLA MC 30xx R***

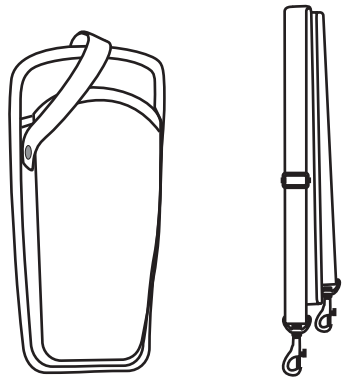

WITH MILITARY TYPE BELT HOLDER

TERMINAL HOLSTER

8015

FOR ***MOTOROLA MC 30xx R***

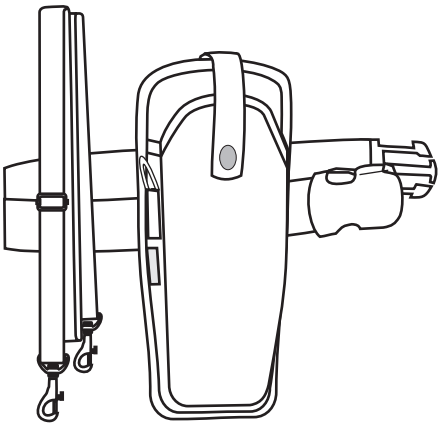

TERMINAL HOLSTER

8018

FOR ***MOTOROLA MC 30xx S (brick)***

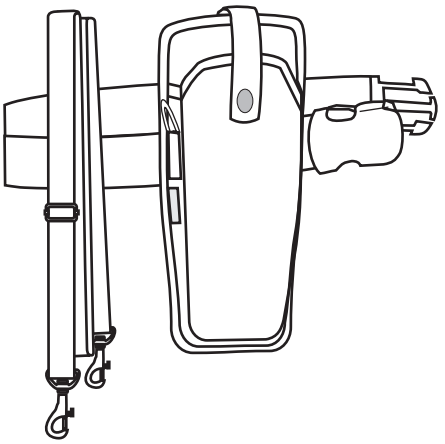

TERMINAL HOLSTER

8027-B

FOR ***INTERMEC CN3e***
HONYWELL DOLPHIN 6500
MOTOROLA MC 30XX S

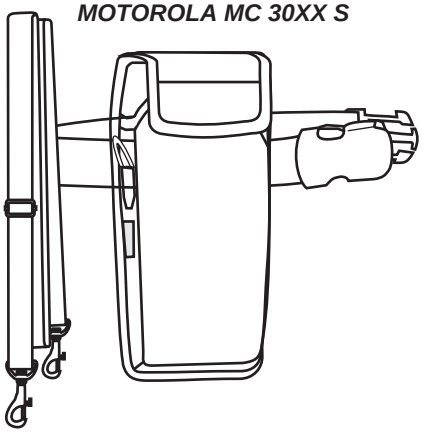

TERMINAL-PRINTER SET BAG

VANS

FOR MOTOROLA ***MC90XX-K***
& ***ZEBRA RW 420*** PRINER

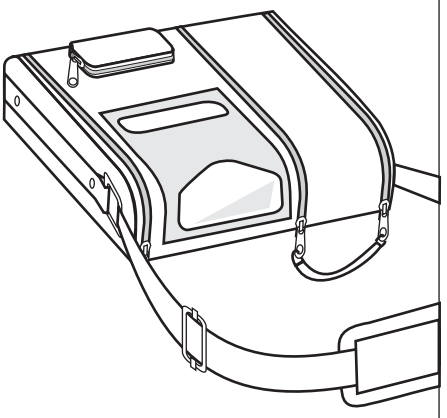

TERMINAL CASE

8104-Z-RS

FOR *MOTOROLA* ***MC9000***
WITH CABLE ADAPTER MODULE

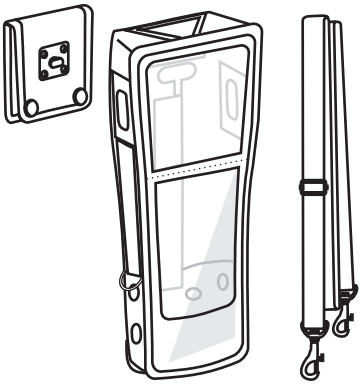

WITH ROTATE OFF BELT HOLDER

TERMINAL CASE

8107-Z

FOR *MOTOROLA* ***MC 9062***

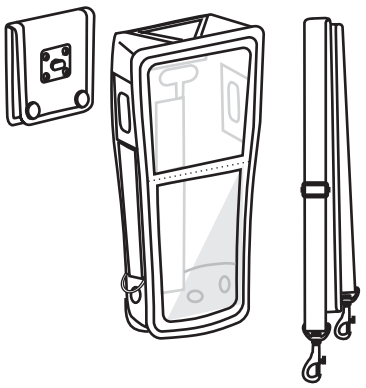

WITH ROTATE OFF BELT HOLDER

TERMINAL CASE

8108-Z-RS

FOR *MOTOROLA* ***MC9062***
WITH **CABLE ADAPTER MODULE**

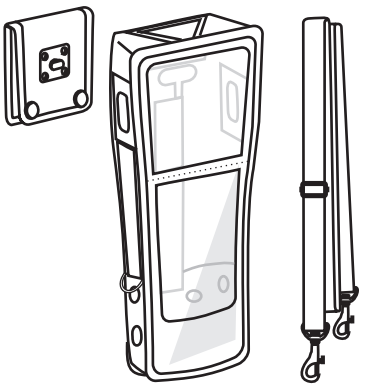

WITH ROTATE OFF BELT HOLDER

MC 30xx R
MC 30xx S (brick)
MC 30xx S
MC 90xx+ZEBRA
MC 9062-K
MC 9000

Motorola MC 90XX

MC 9090-K

TERMINAL CASE

8113-Z

FOR *MOTOROLA* ***MC9090-K***

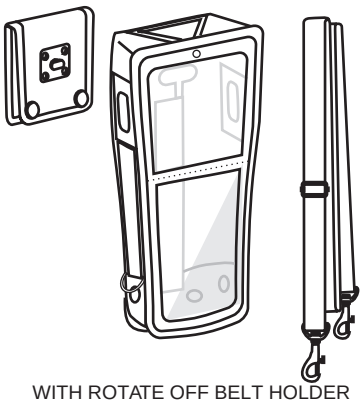

WITH ROTATE OFF BELT HOLDER

TERMINAL CASE

8116

FOR ***MOTOROLA MC 9090-K***
with ***keyboard - 28 key***

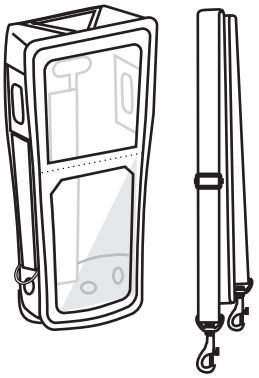

TERMINAL CASE

8116 - P

FOR ***MOTOROLA MC 9090-K***
with ***keyboard - 28 key***

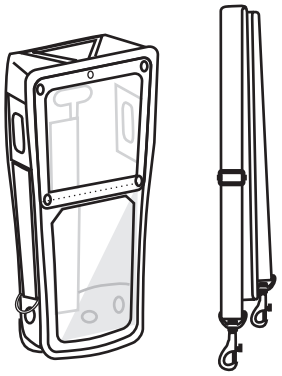

MC 9094-K

TERMINAL CASE

8114-Z

FOR *MOTOROLA* ***MC9094 K***

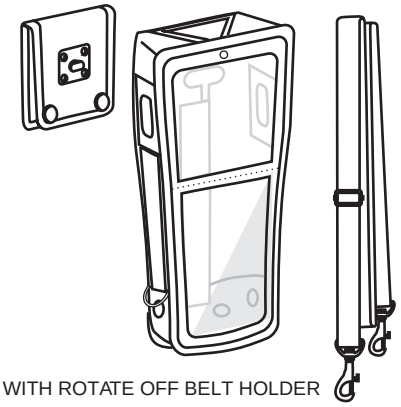

WITH ROTATE OFF BELT HOLDER

TERMINAL CASE

8114-DZ

FOR *MOTOROLA* ***MC9094 K***
EASY DOCKING

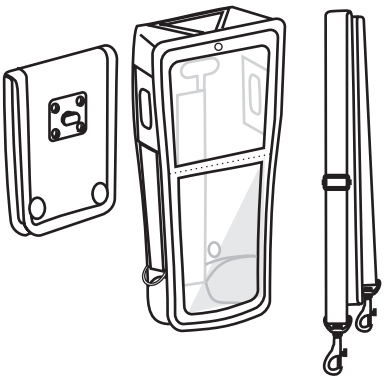

WITH ROTATE OFF BELT HOLDER

TERMINAL CASE

8104-Z-RS-94

FOR *MOTOROLA* ***MC9094***
WITH CABLE ADAPTER MODULE

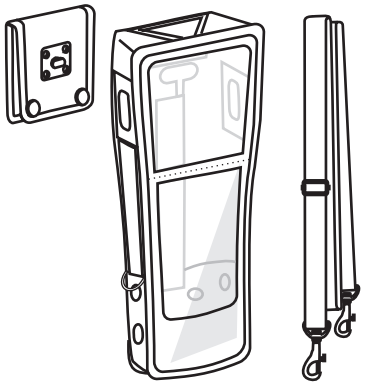

WITH ROTATE OFF BELT HOLDER

TERMINAL HOLSTER

8078-M

FOR ***MOTOROLA MC 909X*** BRICK

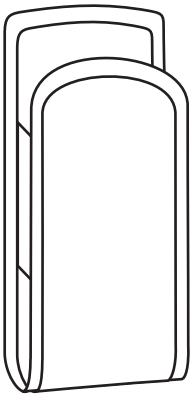

WITH MILITARY TYPE BELT CLIP

TERMINAL HOLSTER

8046-M

FOR ***MOTOROLA MC909X*** BRICK

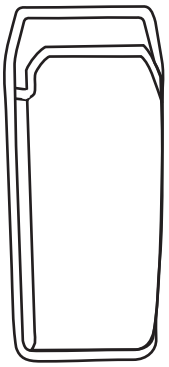

WITH MILITARY TYPE BELT CLIP

Motorola 95XX

TERMINAL HOLSTER

8046

FOR ***MOTOROLA MC909X*** BRICK

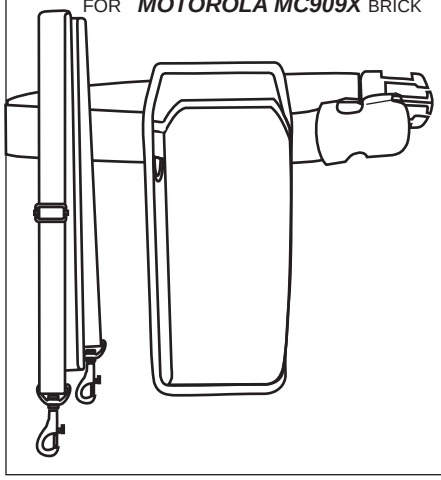

2-AXIES VEHICLE MOUNT HOLSTER

8046-SVM

FOR ***MOTOROLA MC909X BRICK***

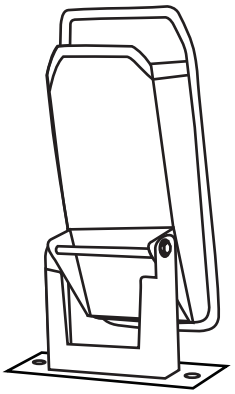

TERMINAL HOLSTER

8047

FOR ***MOTOROLA 909X*** BRICK

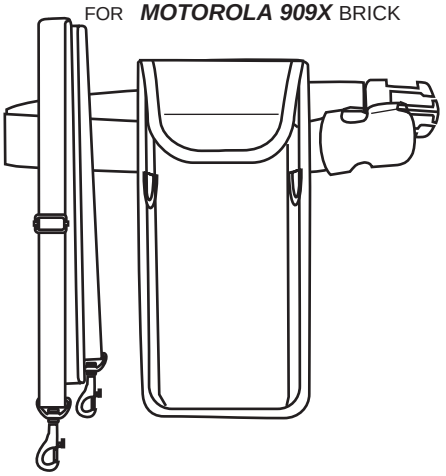

TERMINAL HOLSTER

8049

FOR ***MOTOROLA MC95XX K*** SERIES
with CABLE 25-1163XX-01R system

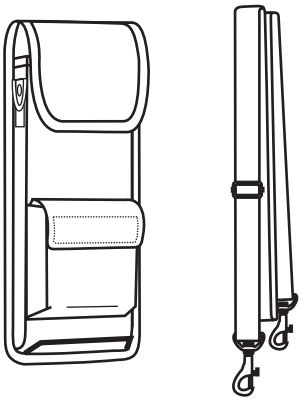

TERMINAL HOLSTER

8052

FOR ***MOTOROLA MC95XX K*** SERIES
with EXTRA BATTERY POCKET

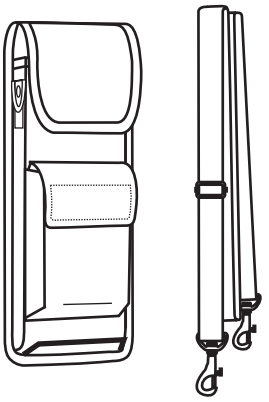

MC 90XX-K

MC 95xx K series

Motorola MC 90XX, 95XX

TERMINAL CASE

8110

FOR *MOTOROLA* ***MC9060-S***

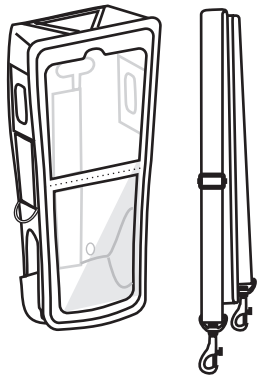

TERMINAL CASE

8110-Z

FOR *MOTOROLA* ***MC9060-S***

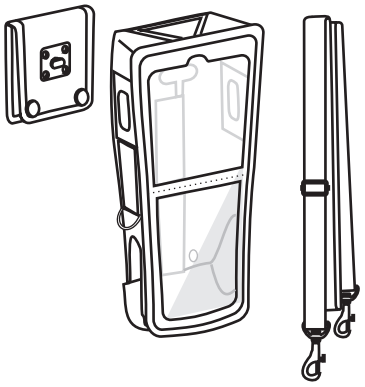

WITH ROTATE OFF BELT HOLDER

TERMINAL CASE

8110-DZH

FOR ***MC9060 S*** MOTOROLA SERIES
EASY DOCKING, HEADPHONE JACK SAFETY

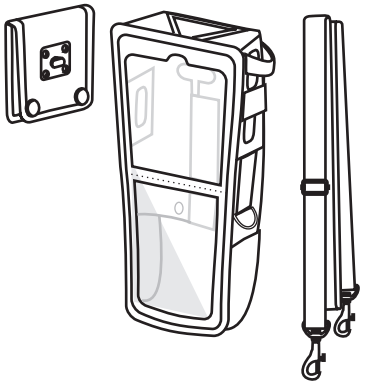

MC 9060-S

TERMINAL CASE

8110-D45ZH

FOR ***MC9060 S*** MOTOROLA SERIES
EASY DOCKING, HEADPHONE JACK SAFETY,
45° ROTATE OFF BELT HOLDER

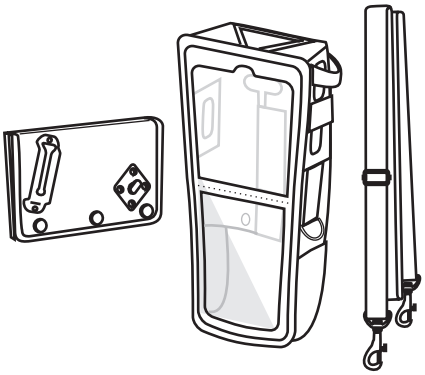

TERMINAL CASE

8110-NFZ

FOR ***MC9060 S*** MOTOROLA SERIES

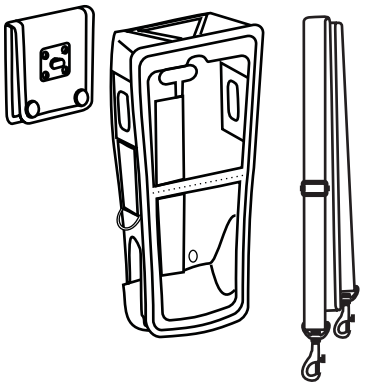

TERMINAL CASE

8111

FOR *MOTOROLA* ***MC9060-S*** WITH GRIP

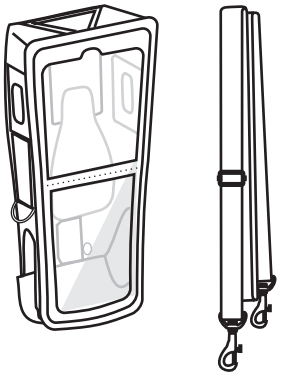

MC 9060-S

TERMINAL HOLSTER

8058

FOR ***MOTOROLA MC909X S***

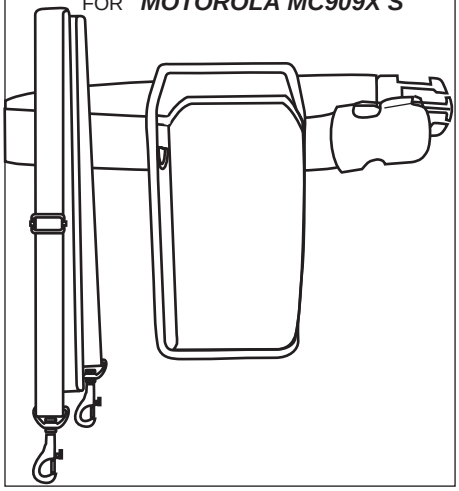

TERMINAL HOLSTER

8013

FOR ***MOTOROLA MC 90xx S (short)***

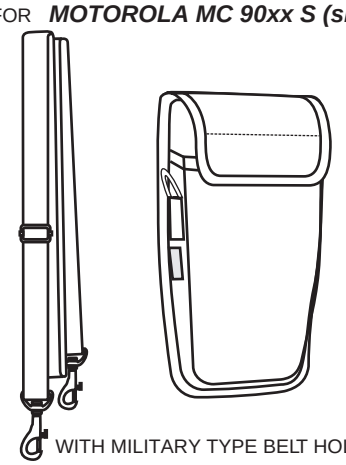

WITH MILITARY TYPE BELT HOLDER

TERMINAL HOLSTER

8017

FOR ***MOTOROLA MC 90xx S (short)***

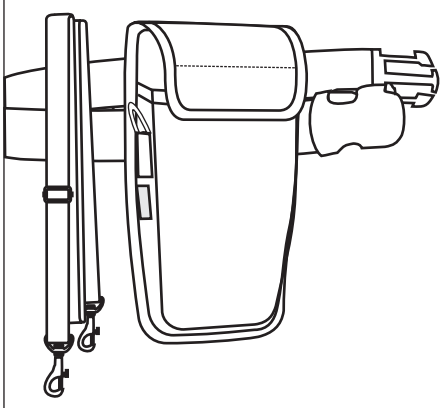

MC 9060-S

Motorola MC 90XX

TERMINAL CASE
8112
FOR ***MOTOROLA MC 9060-G***
with ***keyboard - 53 key***

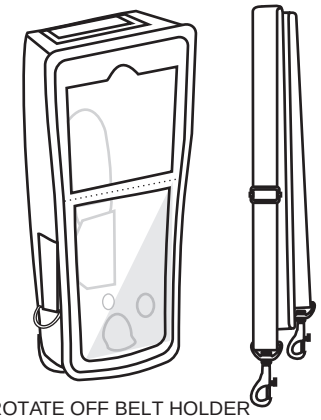

WITH ROTATE OFF BELT HOLDER

TERMINAL CASE
8112-Z
FOR ***MOTOROLA MC 9060 G***
with ***keyboard - 53 key***

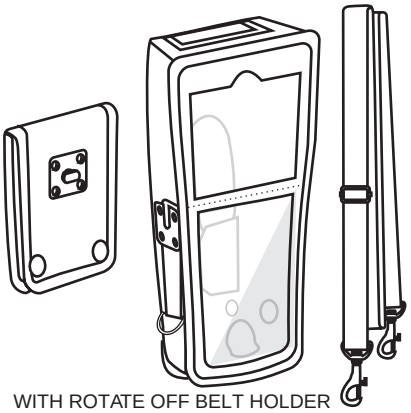

WITH ROTATE OFF BELT HOLDER

TERMINAL CASE
8115
FOR ***MOTOROLA MC 9090 G***
with ***keyboard - 53 key***

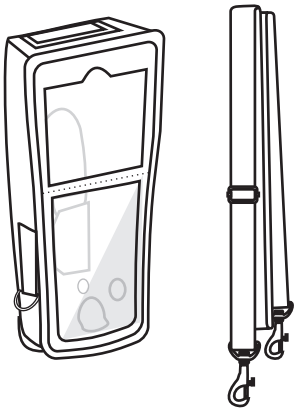

MC 9060-G

TERMINAL CASE
8115-P
FOR ***MOTOROLA MC 9090 G***
with ***keyboard - 53 key***

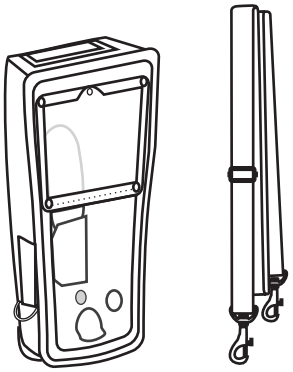

WITH PERMANENT POLICARBON SCREEN PROTECTOR

TERMINAL CASE
8115-F
FOR ***MOTOROLA MC 9090 G***
with ***keyboard - 53 key***

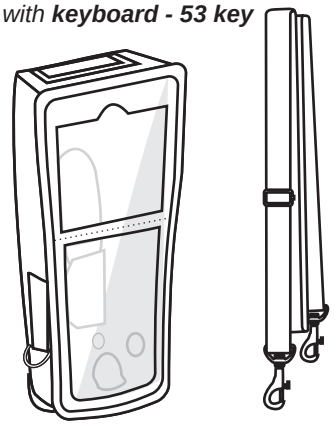

TERMINAL CASE
8115-XP
FOR ***MOTOROLA MC 9090 G***
with ***keyboard - 53 key***

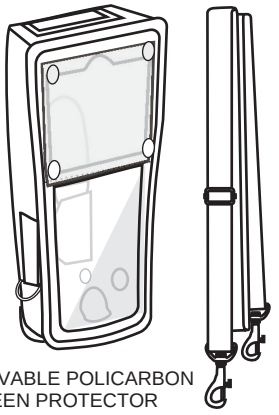

WITH MOVABLE POLICARBON SCREEN PROTECTOR

MC 9090-G

TERMINAL CASE
8115-Z
FOR ***MOTOROLA MC 9090 G***
with ***keyboard - 53 key***

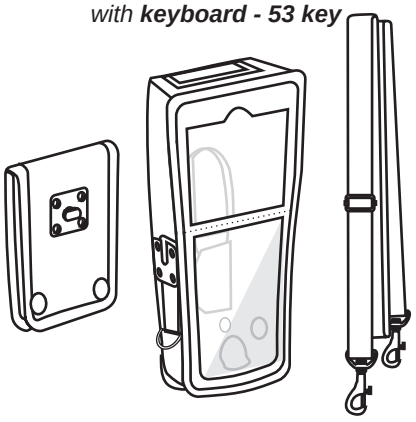

WITH ROTATE OFF BELT HOLDER

TERMINAL CASE
8115-ZXP
FOR ***MOTOROLA MC 9090 G***
with ***keyboard - 53 key***

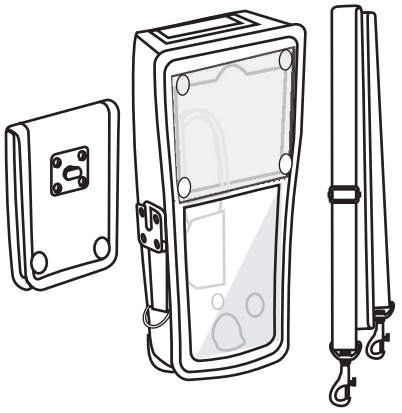

TERMINAL CASE WITH NO ROCK FIX
8115-VM
FOR ***MOTOROLA MC 9090 G***
with ***keyboard - 53 key***

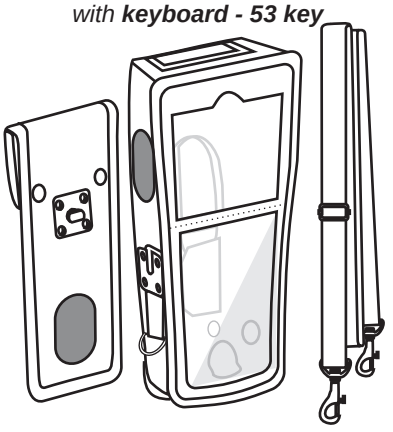

MC 9090-G

Motorola MC 90XX

UNIVERSAL HOLSTER with 2 belts

8004

FOR
MOTOROLA MC90xx - G
DATALOGIC - ***VIPER***
INTERMEC - ***CK30***
LXE - ***MX 9***

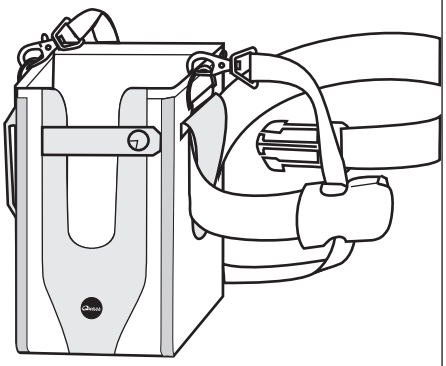

VEHICLE MOUNT HOLSTER

8004-VM

FOR MOTOROLA ***MC90xx***
DATALOGIC - ***VIPER*** INTERMEC - ***CK30***

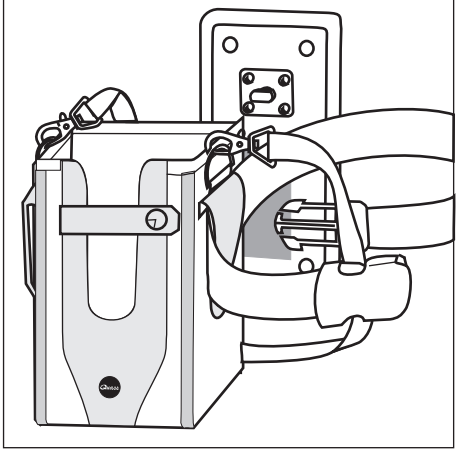

car / trolley / fork-lift truck holder

MB-8004

8004-M HOLSTER WITH METAL BOX

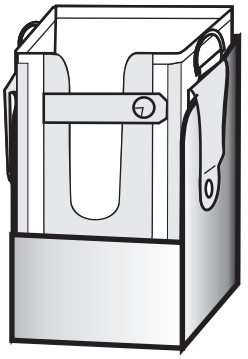

MC 90xx-G

2-AXIES VEHICLE MOUNT HOLSTER

8004-SVM

FOR MOTOROLA ***MC90xx***
DATALOGIC - ***VIPER*** INTERMEC - ***CK30***

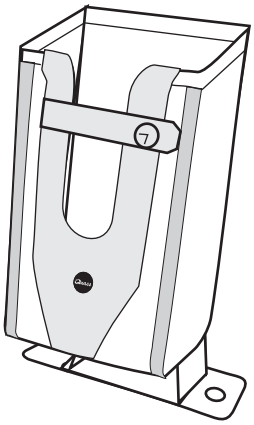

2-AXIES VEHICLE MOUNT HOLSTER - REVERSE

8004-SVM-R

FOR MOTOROLA ***MC90xx G***
DATALOGIC - ***VIPER*** INTERMEC - ***CK30***

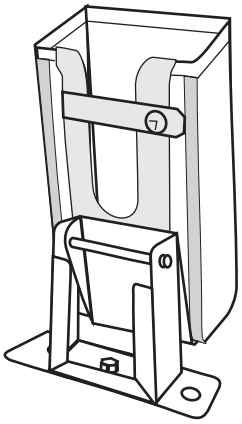

UNIVERSAL HOLSTER with 2 belts

8004-M

FOR MOTOROLA ***MC90xx G***
TIGHTLY FITTED

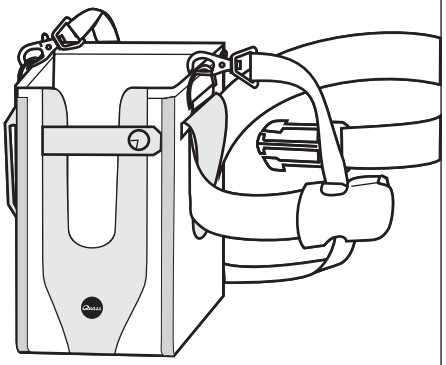

MC 90xx-G

2-AXIES VEHICLE MOUNT HOLSTER

8029-SVM

FOR MOTOROLA ***MC9090 G series***

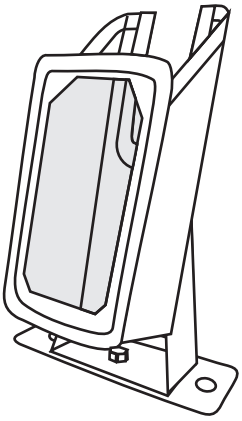

HOLSTER

8003

FOR
MOTOROLA MC90xx-G
DATALOGIC - ***VIPER***

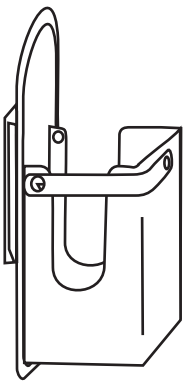

WITH MILITARY TYPE BELT HOLDER

LEATHER HOLSTER

8002

FOR ***MC90xx-G*** MOTOROLA SERIES

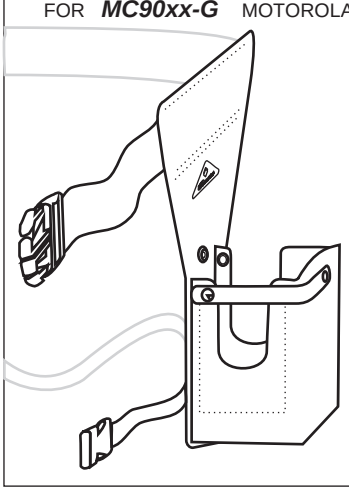

MC 90xx-G

Motorola MC 50, MC 55, DS 6708

TERMINAL HOLSTER

8025

FOR ***MOTOROLA MC50 NAV 1D/2D***

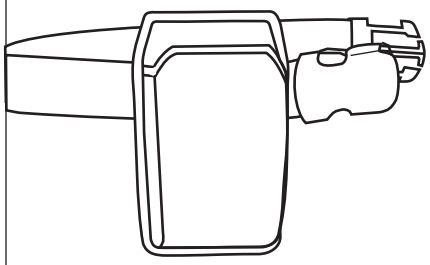

TERMINAL HOLSTER

8026

FOR ***MOTOROLA MC50 NAV 1D/2D***

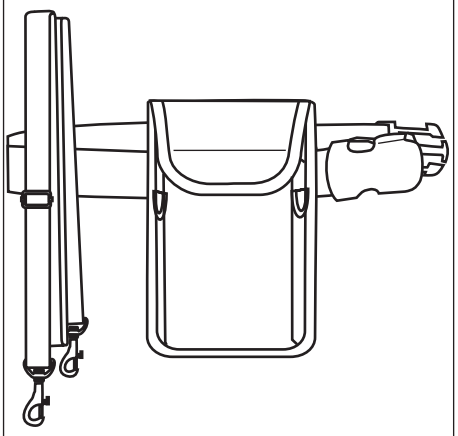

MC 50 NAV MC 50 QWERTY

TERMINAL HOLSTER

8024

FOR ***MOTOROLA MC5590 , MC50 QWERTY 1D/2D***

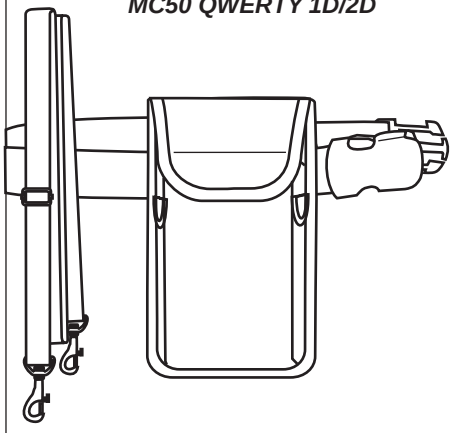

TERMINAL HOLSTER

8023

FOR ***MOTOROLA MC5590, MC5574, MC50 QWERTY 1D/2D, MC 65***

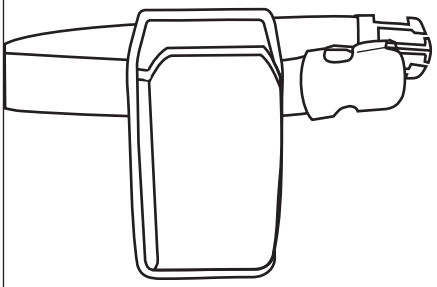

MC 50 QWERTY

TERMINAL CASE

8155

FOR MOTOROLA ***MC55 / MC65***

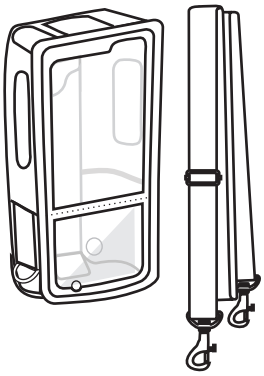

TERMINAL CASE

8155-Z

FOR MOTOROLA ***MC55 / MC65***

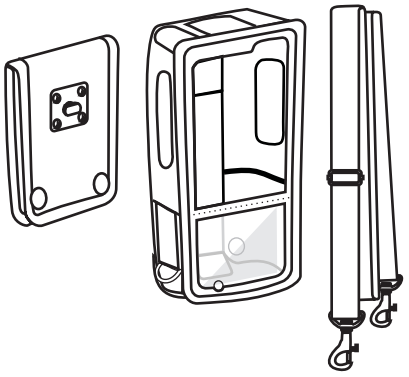

TERMINAL HOLSTER
WITH MAGNETIC LOCK

8079

FOR ***MOTOROLA MC 5590***

(3600 mAh BATTERY)

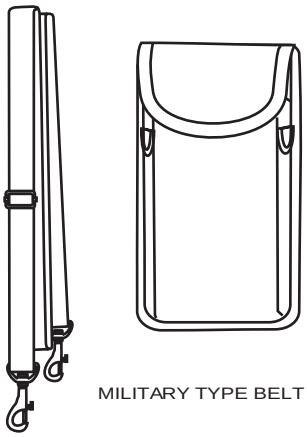

MILITARY TYPE BELT CLIP

MC 55 MC 65

Motorola MC 55, MC 65

TERMINAL HOLSTER

8043

FOR *MOTOROLA* ***MC55/MC65*** SERIES

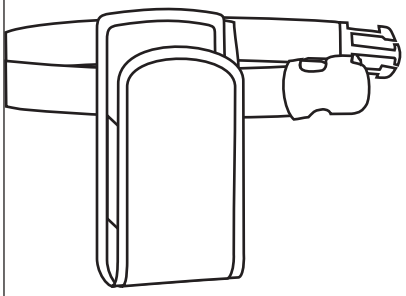

TERMINAL HOLSTER

8043-C

FOR *MOTOROLA* ***MC55 / MC65*** SERIES

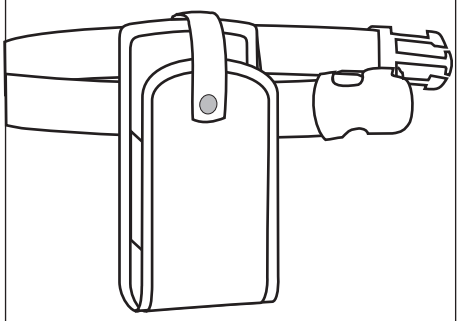

TERMINAL HOLSTER

8023

FOR ***MOTOROLA MC5590, MC5574, MC50 QWERTY 1D/2D, MC 65***

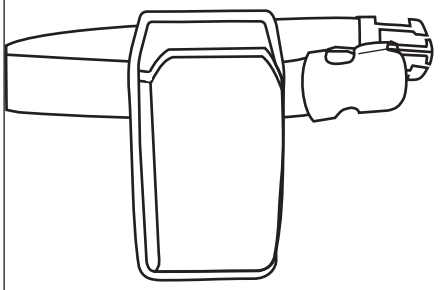

TERMINAL HOLSTER

8059

FOR ***MOTOROLA MC5574/ MC65***

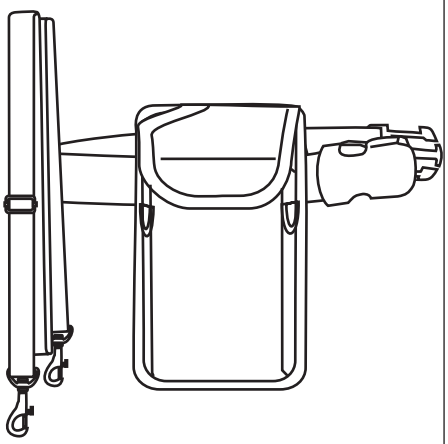

MC 55 MC 65

MC 55 MC 65

Motorola MC70

TERMINAL CASE

7001

FOR MOTOROLA ***MC70***

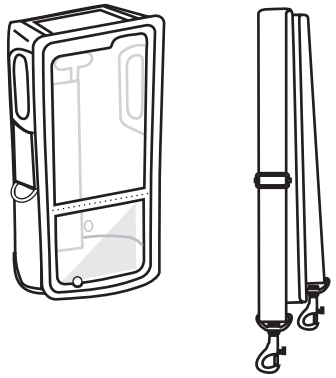

TERMINAL CASE

7001-Z

FOR MOTOROLA ***MC70***

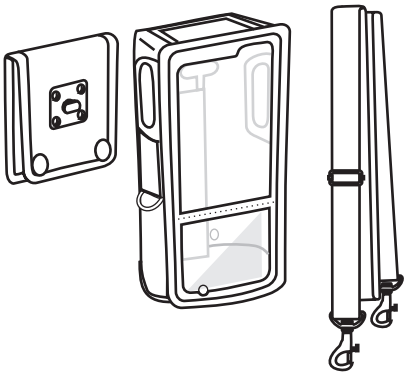

WITH ROTATE OFF BELT HOLDER

TERMINAL CASE

7011

FOR MOTOROLA ***MC70 with 3600 mAh Battery***

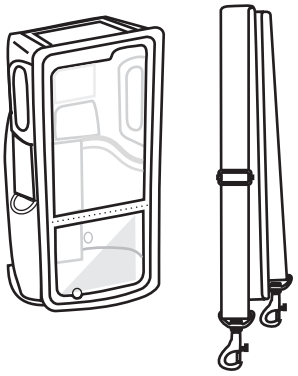

MC 70

TERMINAL CASE

7011-F

FOR MOTOROLA ***MC70 with 3600 mAh Battery***

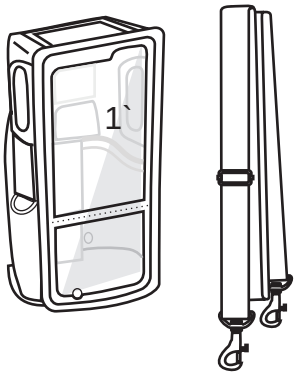

SCREEN AND KEYBOARD
PROTECTED BY FOIL

TERMINAL CASE

7011-Z

FOR MOTOROLA ***MC70 with 3600 mAh Battery***

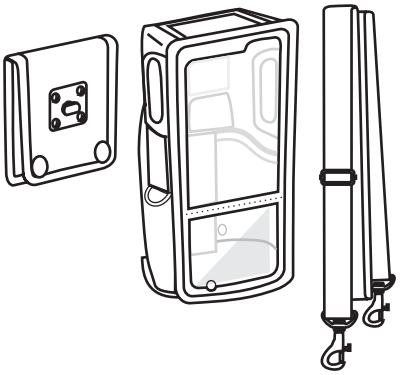

WITH ROTATE OFF BELT HOLDER

TERMINAL CASE

7011-FZ

FOR MOTOROLA ***MC70 with 3600 mAh Battery***

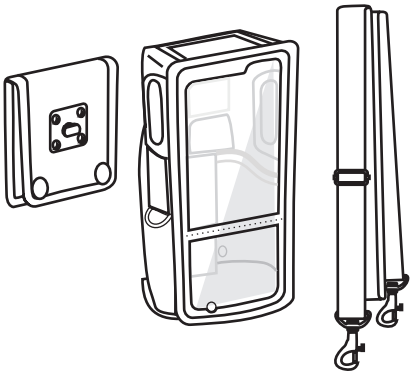

WITH ROTATE OFF BELT HOLDER
SCREEN AND KEYBOARD PROTECTED BY FOIL

MC 70

TERMINAL CASE

7011-P.

FOR MOTOROLA ***MC70 with 3600 mAh Battery***

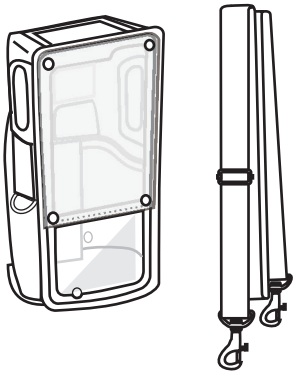

WITH SOLID POLYCARBON
SCREEN PROTECTOR

TERMINAL CASE

7012-Z

FOR MOTOROLA ***MC7094 with dual battery***

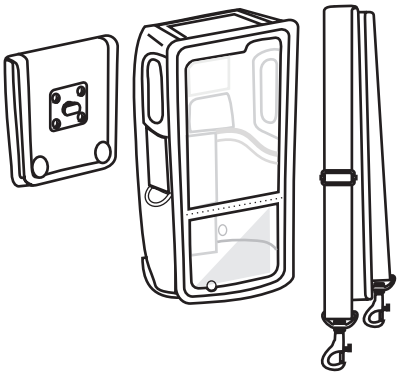

MC 70

Motorola MC 70

TERMINAL HOLSTER

7002

FOR ***MOTOROLA MC 70***

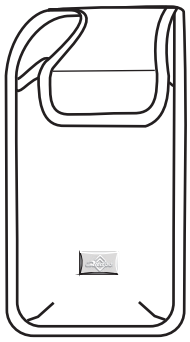

WITH MILITARY TYPE BELT HOLDER

TERMINAL HOLSTER

7003

FOR ***MOTOROLA MC 70***

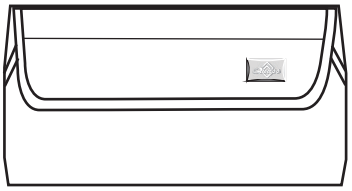

TERMINAL HOLSTER

7004-B

FOR MOTOROLA ***MC7x*** SERIES

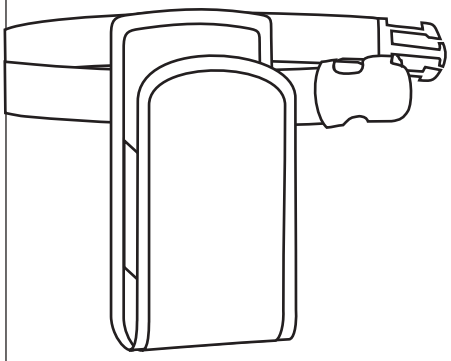

LEATHER TERMINAL HOLSTER

7004-LB

FOR MOTOROLA ***MC7x*** SERIES

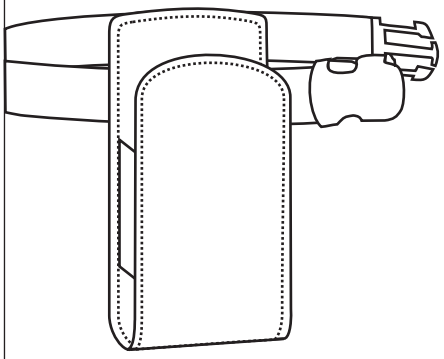

TERMINAL HOLSTER

7005-B

FOR MOTOROLA ***MC7x***

WITH TECHNOLOGY SOLUTIONS

SMARTCARD READER

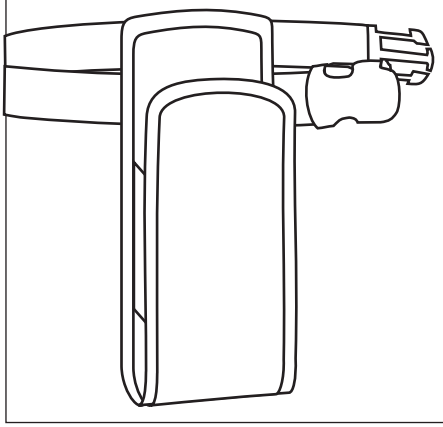

MC70 / MC 75

TERMINAL CASE

7013

FOR MOTOROLA ***MC7594***

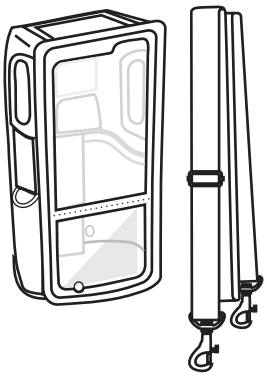

TERMINAL CASE

7013-Z

FOR MOTOROLA ***MC7594***

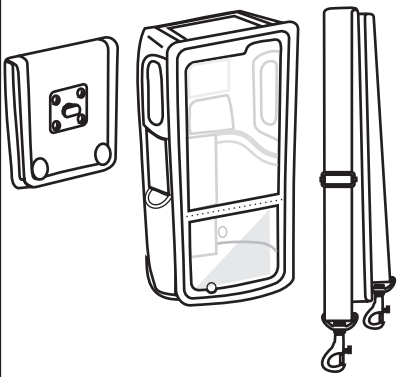

WITH ROTATE OFF BELT HOLDER

TERMINAL CASE

7014-DZ

FOR MOTOROLA ***MC7596***

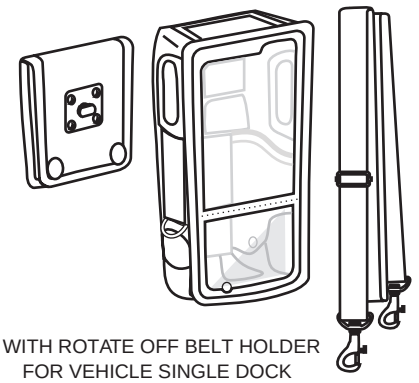

WITH ROTATE OFF BELT HOLDER
FOR VEHICLE SINGLE DOCK

MC 75

MC 70

Motorola MC 75

TERMINAL CASE

7015

FOR MOTOROLA ***MC7594 with extended battery***

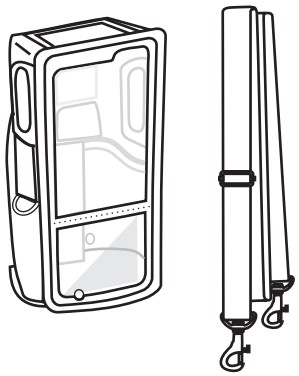

TERMINAL HOLSTER

8062

FOR ***MOTOROLA MC75xx***

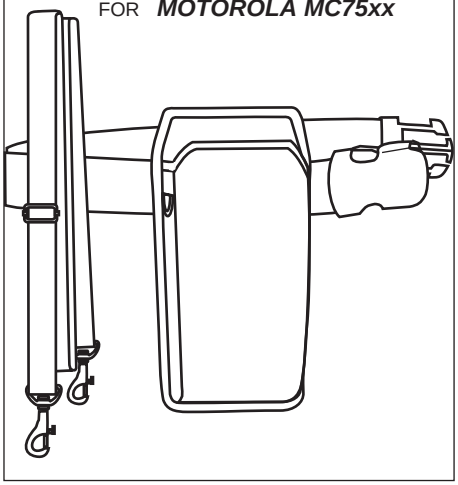

TERMINAL HOLSTER

8063

FOR ***MOTOROLA MC75xx***

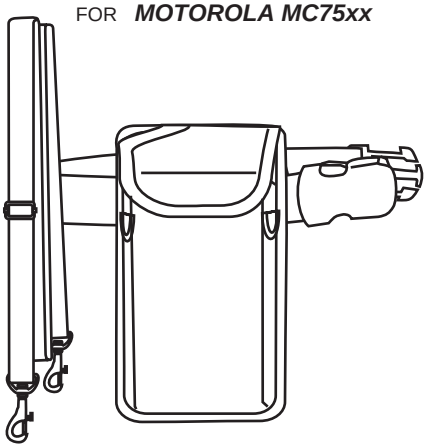

TERMINAL HOLSTER

8064

FOR ***MOTOROLA MC75xx***
with double battery

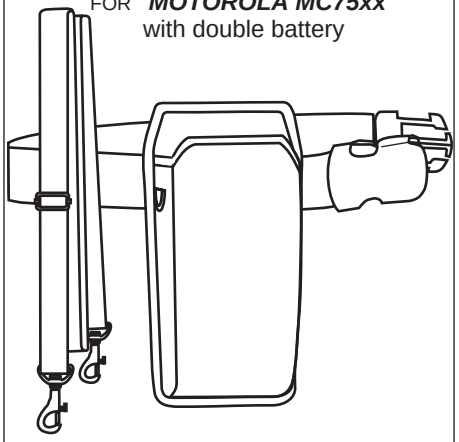

TERMINAL HOLSTER

8065

FOR ***MOTOROLA MC75xx***
with double battery

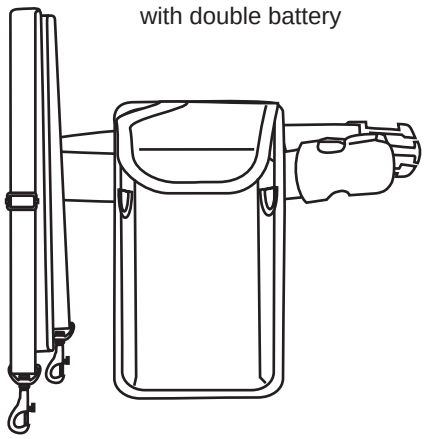

MC 75

MC 75

MC 75

Motorola MC 75 + Smart Card Reader

(Technology Solutions)

MC 75+SCR

TERMINAL HOLSTER

8066

FOR ***MOTOROLA MC75xx***
(SINGLE/DOUBLE BATTERY)
WITH TECHNOLOGY SOLUTIONS
SMART CARD READER

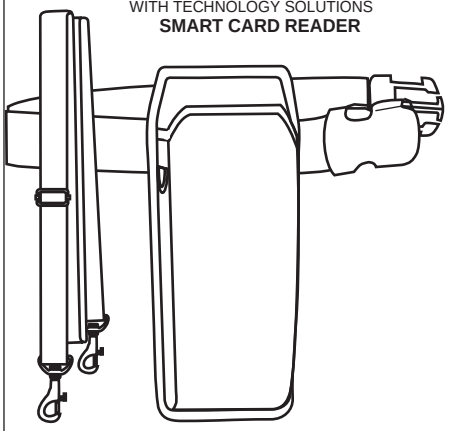

UNIVERSAL HOLSTER

8039

FOR ***INTERMEC CK3,***
PSION WORKABOUT PRO,CASIO DT-X30
MOTOROLA MC75XX with Smart Card Reader
(Technology Solutions)

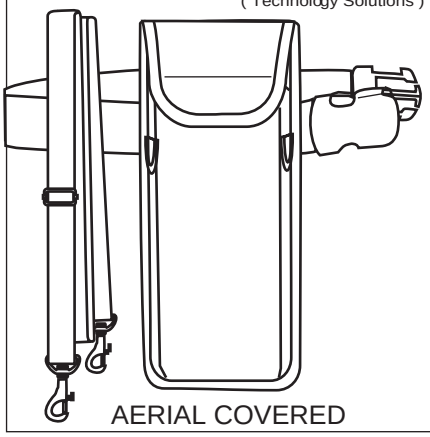

AERIAL COVERED

TERMINAL HOLSTER

8067

FOR ***MOTOROLA MC75xx***
WITH TECHNOLOGY SOLUTIONS
SMART CARD READER

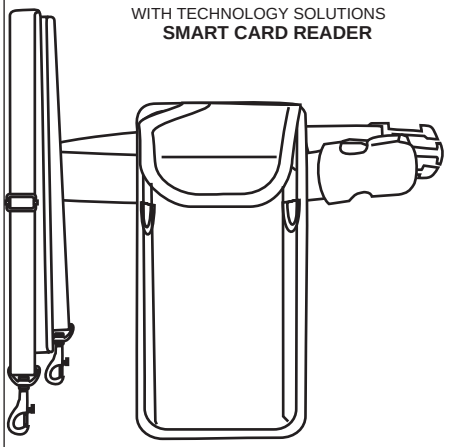

MC 75+SCR

TERMINAL HOLSTER
WITH MAGNETIC LOCK

8069

FOR ***MOTOROLA MC75xx***
WITH TECHNOLOGY SOLUTIONS
SMART CARD READER

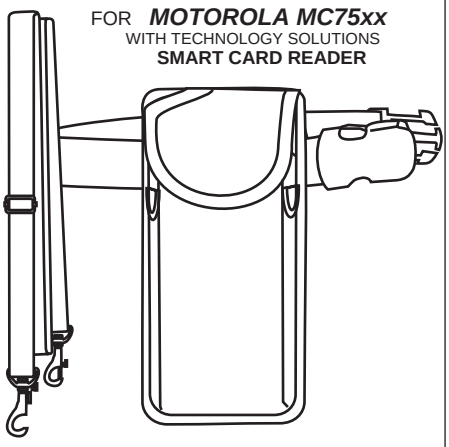

MAGNETIC LOCK

TERMINAL HOLSTER

8066-SVM

FOR ***MOTOROLA MC75XX***
with Smart Card Reader (Technology Solutions)

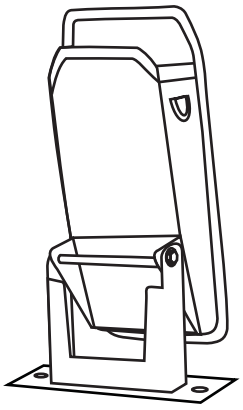

MC 75+SCR

TERMINAL HOLSTER

8046

FOR ***MOTOROLA 909X*** BRICK

MC 75XX with 3800mAh battery
and Smart Card Reader (TECHNOLOGY SOLUTIONS)

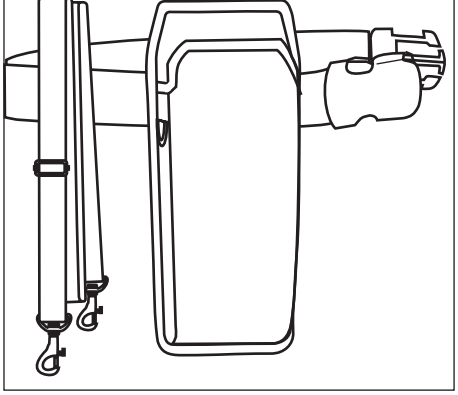

TERMINAL HOLSTER

8047

FOR ***MOTOROLA 909X*** BRICK

MC 75XX with 3800mAh battery
and Smart Card Reader (TECHNOLOGY SOLUTIONS)

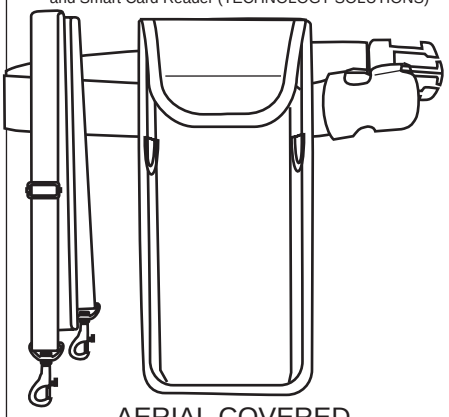

AERIAL COVERED

2-AXIES VEHICLE MOUNT HOLSTER

8046-SVM

FOR ***MOTOROLA 909X*** BRICK

MC 75XX with 3800mAh battery
and Smart Card Reader (TECHNOLOGY SOLUTIONS)

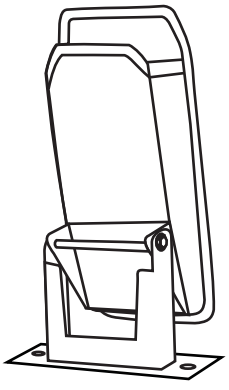

MC 75 double battery +SCR

Motorola

TERMINAL CASE

8120

FOR **MOTOROLA** ***PDT 6846***

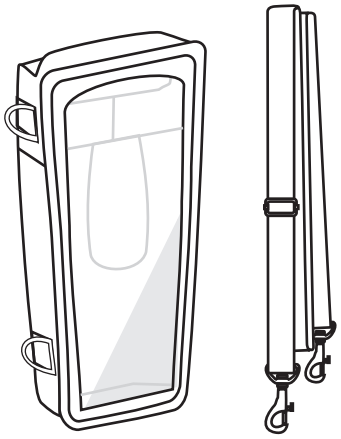

TERMINAL CASE

8800-Z

FOR **MOTOROLA** ***PPT 8800***

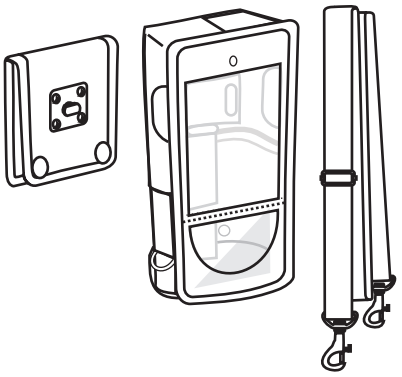

WITH ROTATE OFF BELT HOLDER

TERMINAL HOLSTER

8021

FOR ***MOTOROLA PPT8800***

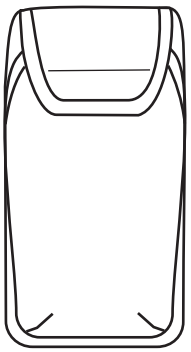

WITH MILITARY TYPE BELT CLIP

PPT 8800

PDT 6846

TERMINAL HOLSTER

9003

FOR ***MOTOROLA PDT 8100***

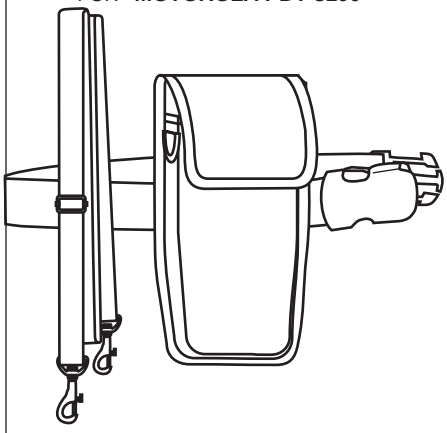

TERMINAL HOLSTER

9004

FOR ***MOTOROLA PDT 8100***

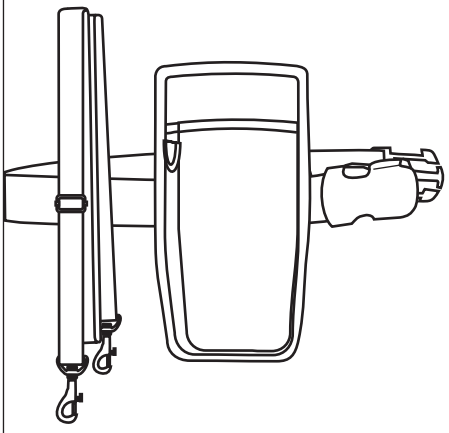

TERMINAL CASE

8169

FOR ***MOTOROLA PDT 3146***

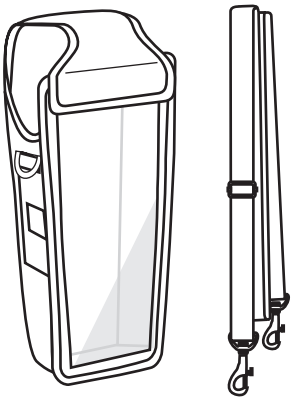

PDT 8100

PDT 3146

TERMINAL HOLSTER

8031

FOR ***PSION - WORKABOUT PRO PDTP5S07***
MOTOROLA PDT 3146

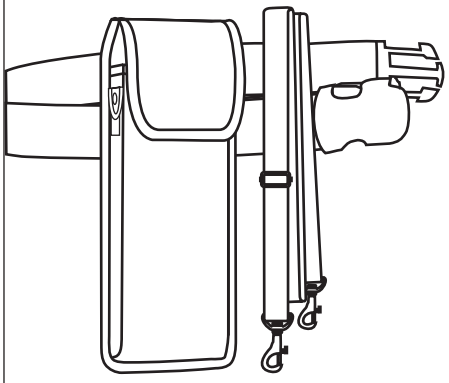

HOLSTER

8007

FOR SCANNERS:
MOTOROLA **Pxxx** series **,** PSC **POWERSCAN**

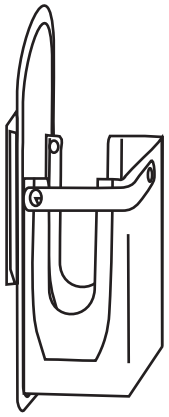

WITH MILITARY TYPE BELT HOLDER

HOLSTER

8007-B

FOR SCANNERS:
MOTOROLA **PXXX** bar code scanners series,
PSC **POWERSCAN**

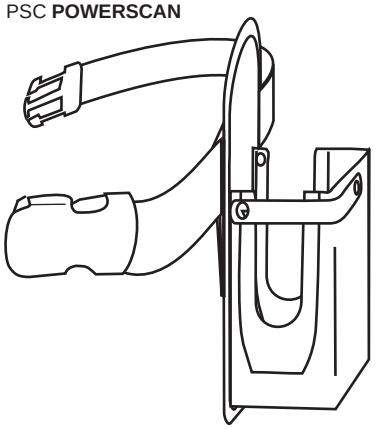

PXXX

PDT 3146

Motorola

TERMINAL CASE

8136-Z

FOR MOTOROLA ***HC 700***

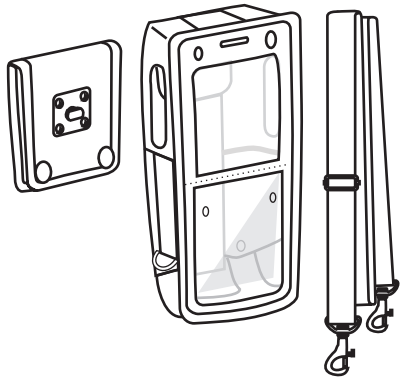

WITH ROTATE OFF BELT HOLDER

TERMINAL CASE

8129

FOR ***MOTOROLA SYMBOL MC35***

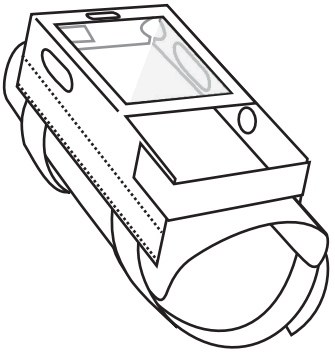

TERMINAL CASE

8146

FOR ***SYMBOL WSS 1000***

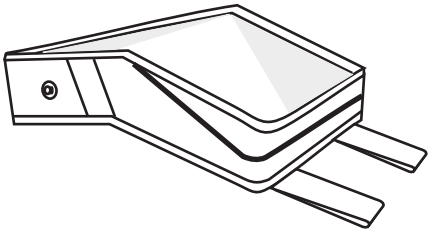

*see **2006** for the FOREARM mount option*

HC 700 MC 35 WSS 1000

TERMINAL CASE

8150

FOR ***MOTOROLA WT40xx series***
(STANDARD BATTERY)
WITH BELT STRAPS

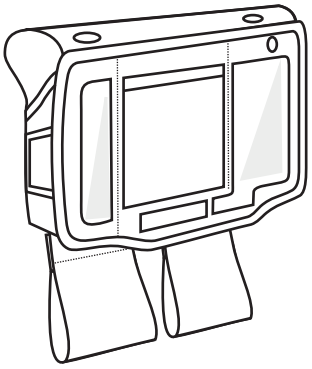

*see **2011** for the FOREARM mount option*

TERMINAL CASE

8151

FOR ***MOTOROLA WT40xx series***
(EXTENDED BATTERY)
WITH BELT STRAPS

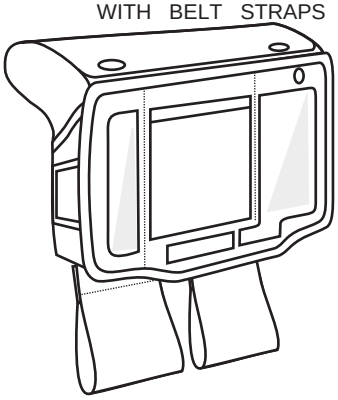

*see **2011** for the FOREARM mount option*

TERMINAL CASE

8151-B

FOR ***MOTOROLA WT40xx series***
(EXTENDED BATTERY)
WITH BELT

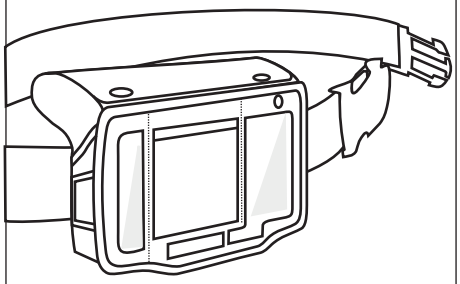

WT 40XX

TERMINAL CASE

8158

FOR ***MOTOROLA WT4090 VOW***
(STANDARD BATTERY)
WITH BELT STRAPS

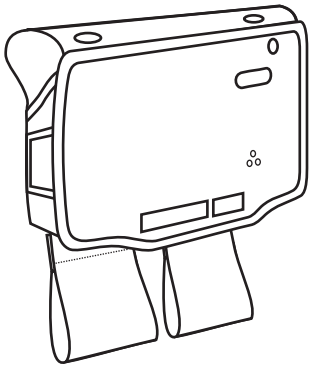

TERMINAL CASE

8159

FOR ***MOTOROLA WT4090 VOW***
(EXTENDED BATTERY)
WITH BELT STRAPS

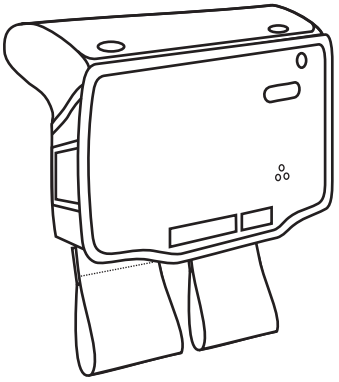

TERMINAL CASE

8159-B

FOR ***MOTOROLA WT4090 VOW***
(EXTENDED BATTERY)
WITH HIP BELT

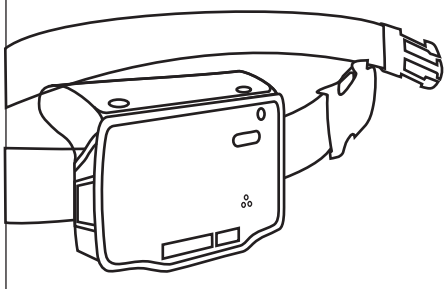

WT 40XX WT 4090 VOW

Motorola

TERMINAL HOLSTER

8048

FOR MOTOROLA ***PPT28xx*** SERIES

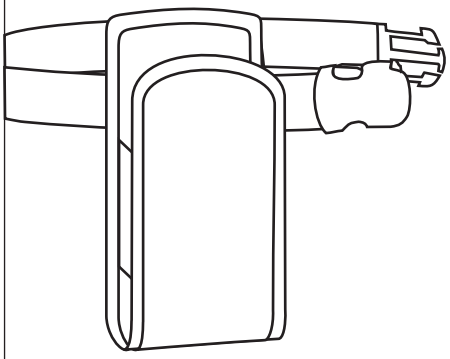

HOLSTER

8057

FOR ***MOTOROLA MT 20XX*** series

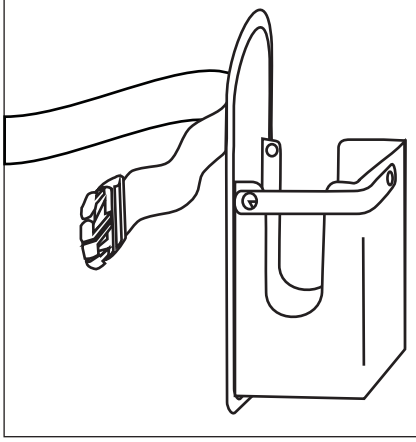

MT 20XX

PPT 28XX

HOLSTER with 2 belts

8028

FOR MOTOROLA ***DS 3400, LS 3400 series***

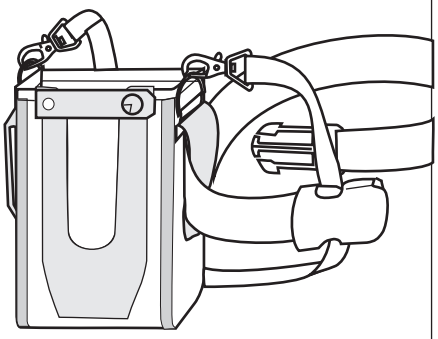

2-AXIES VEHICLE MOUNT HOLSTER

8028-SVM

FOR MOTOROLA ***DS 3400, LS 3400 series***

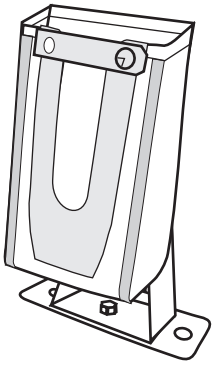

DS3400/LS3400

PROTECTIVE BOOT

1005

FOR ***MOTOROLA DS 6708***

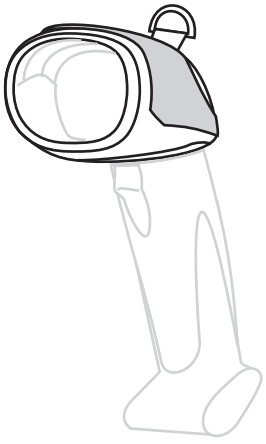

PROTECTIVE BOOT

1005-Z

FOR ***MOTOROLA DS 6708***

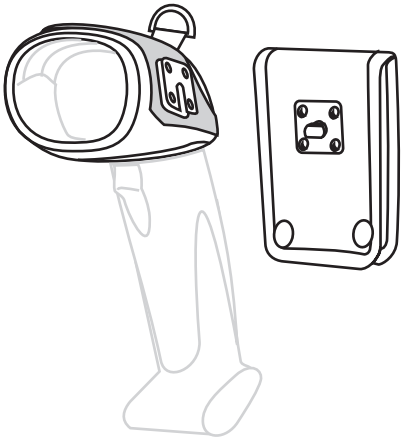

PROTECTIVE BOOT

1007

FOR ***MOTOROLA LS2208***

LS 2208

DS 6708

INTERMEC

UNIVERSAL HOLSTER with 2 belts

8004

FOR
MOTOROLA ***MC90xx - G***
DATALOGIC - ***VIPER***
INTERMEC - ***CK30***
LXE - ***MX 9***

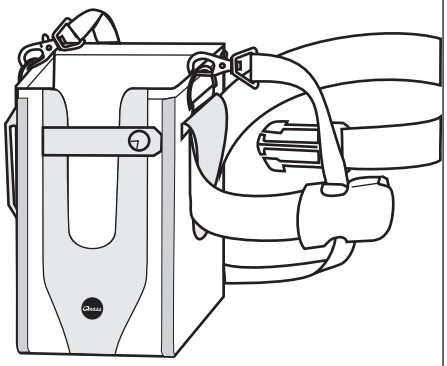

VEHICLE MOUNT HOLSTER

8004-VM

FOR MOTOROLA ***MC90xx***
DATALOGIC - ***VIPER*** INTERMEC - ***CK30***

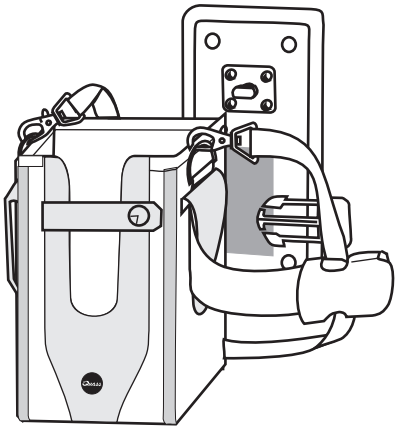

car / trolley / fork-lift truck holder

MB-8004

8004-M HOLSTER WITH METAL BOX

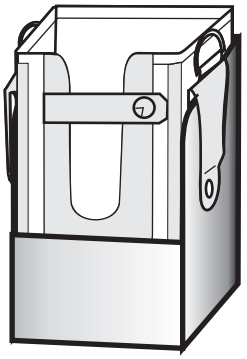

CK30

2-AXIES VEHICLE MOUNT HOLSTER

8004-SVM

FOR MOTOROLA ***MC90xx***
DATALOGIC - ***VIPER*** INTERMEC - ***CK30***

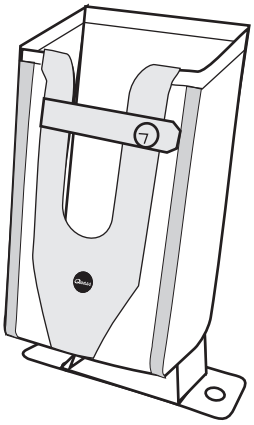

2-AXIES VEHICLE MOUNT HOLSTER - REVERSE

8004-SVM-R

FOR MOTOROLA ***MC90xx G***
DATALOGIC - ***VIPER*** INTERMEC - ***CK30***

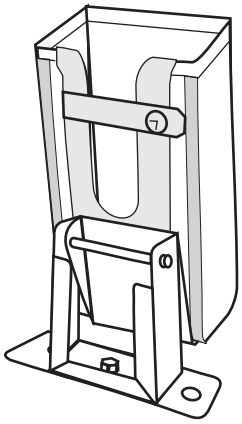

CK30

TERMINAL CASE

8125-Z

FOR INTERMEC ***CK 30***

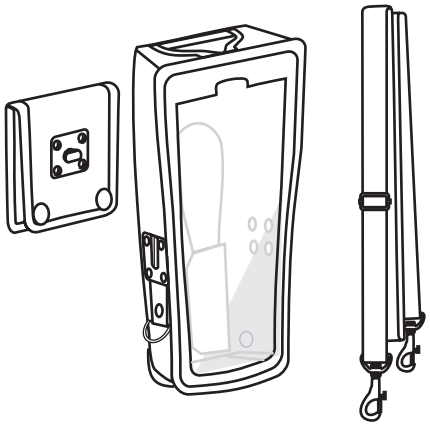

TERMINAL CASE

8125-NF

FOR INTERMEC ***CK 30***

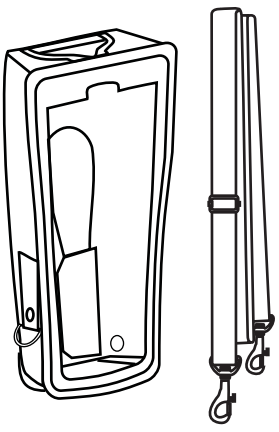

TERMINAL CASE

8125-O

FOR INTERMEC ***CK 30***
OVAL CASE TYPE

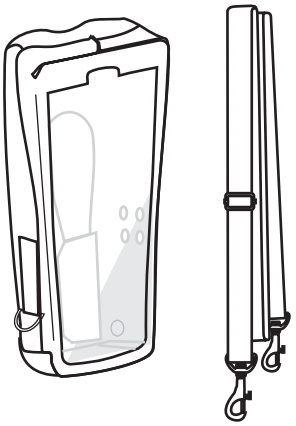

CK30

INTERMEC

TERMINAL CASE
8118
FOR ***INTERMEC CK 31***

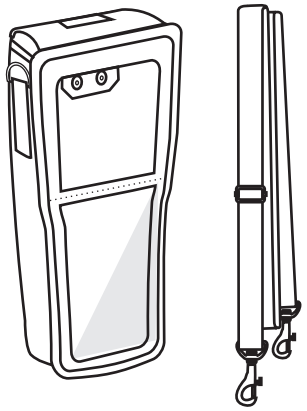

TERMINAL CASE
8163
FOR ***INTERMEC CK31 GUN***

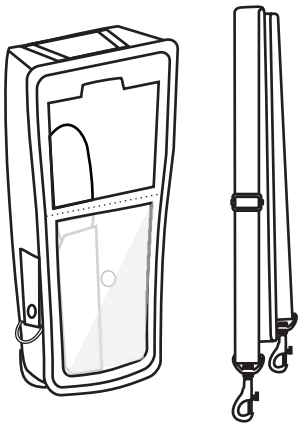

HOLSTER
8011
FOR ***INTERMEC - CK31*** WITH RUBBER BOOT

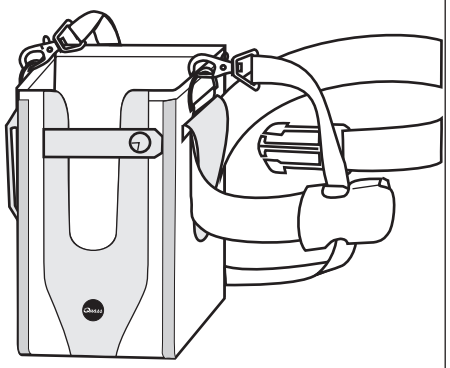

CK31

TERMINAL CASE
8148
FOR ***INTERMEC CK3*** BRICK

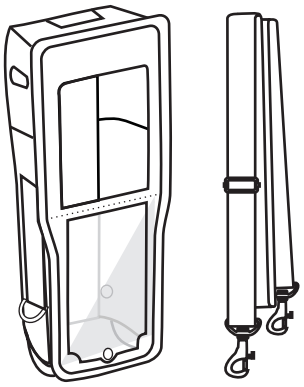

TERMINAL CASE
8149
FOR ***INTERMEC CK3*** WITH HANDLE

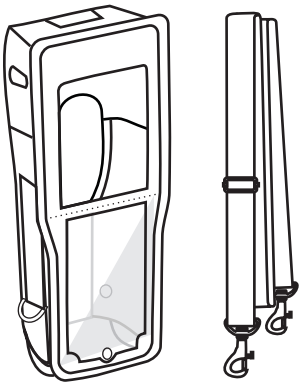

UNIVERSAL TERMINAL HOLSTER
8040
FOR ***INTERMEC CK3***
PSION WORKABOUT PRO

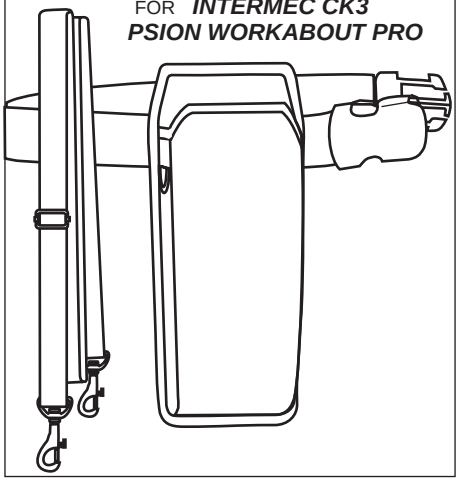

CK 3

UNIVERSAL HOLSTER
8040-SVM
FOR ***INTERMEC CK3,***
PSION WORKABOUT PRO

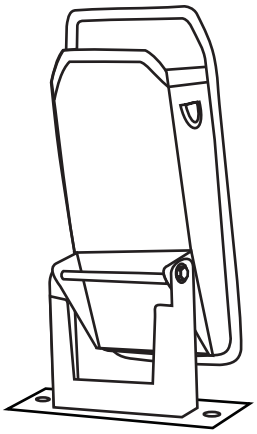

UNIVERSAL TERMINAL HOLSTER
8039
FOR ***INTERMEC CK3,***
PSION WORKABOUT PRO

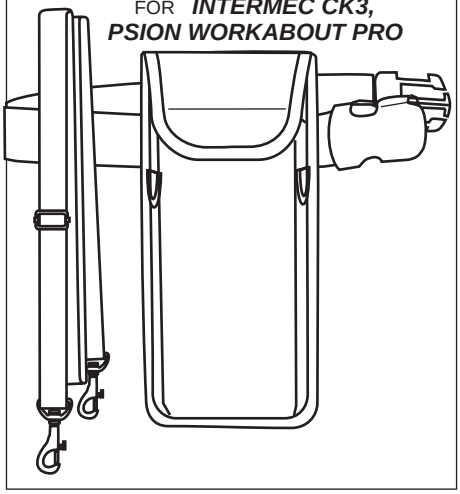

HOLSTER with 2 belts
8019
FOR MOTOROLA ***MC30xx G***
DATALOGIC SKORPIO GUN
DATALOGIC KYMAN
INTERMEC CK3
WITH PISTOL GRIP

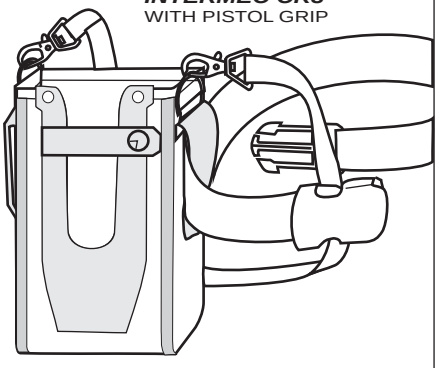

other options of the 8019 on page 4

CK 3

INTERMEC

2-AXIES VEHICLE MOUNT HOLSTER

8019-SVM

FOR MOTOROLA ***MC30xx G***
DATALOGIC SKORPIO GUN
DATALOGIC KYMAN
INTERMEC CK3
WITH PISTOL GRIP

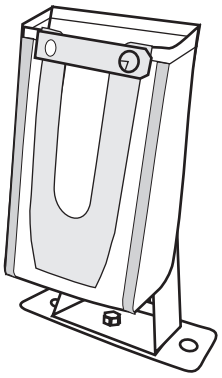

TERMINAL CASE

8130-D

FOR ***INTERMEC CK60, CK61***
EASY DOCKING

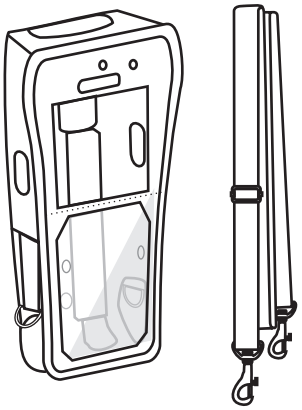

FULL LEATHER CASE

8130-LD

FOR ***INTERMEC CK60, CK61***
EASY DOCKING

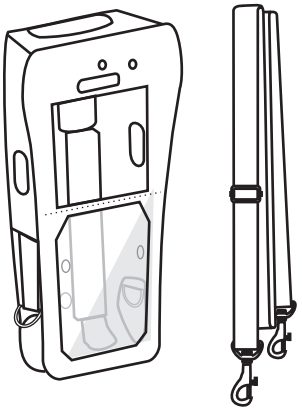

CK 3 CK60 CK61

UNIVERSAL TERMINAL HOLSTER

8010

FOR ***INTERMEC CK60, CK61***
ALSO WITH AA5 ADAPTER

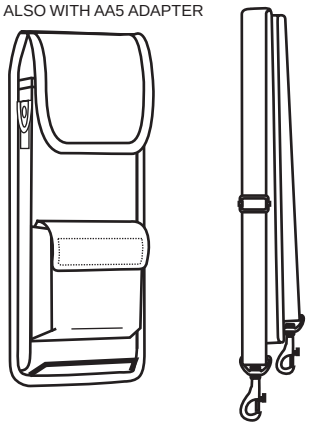

VEHICLE MOUNT HOLSTER

8012

FOR ***INTERMEC CK60, CK61***

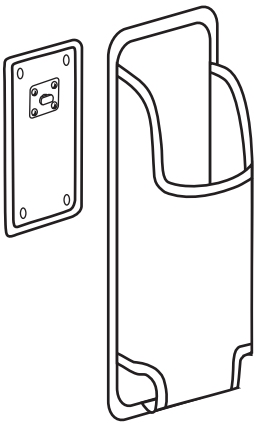

TERMINAL HOLSTER

8014

FOR ***INTERMEC 700***

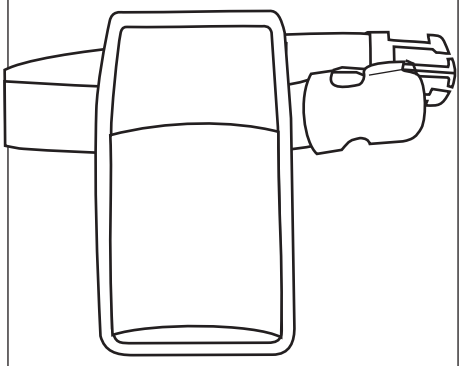

700 CK60 CK61

HOLSTER with 2 belts

8034

FOR INTERMEC ***SR 61***

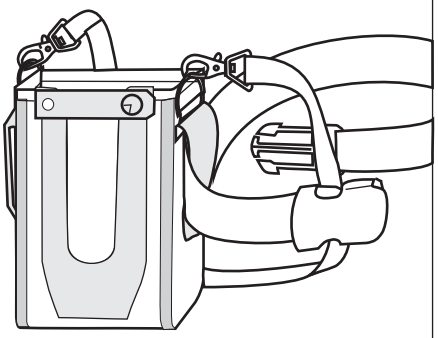

2-AXIES VEHICLE MOUNT HOLSTER

8034-SVM

FOR INTERMEC ***SR 61***

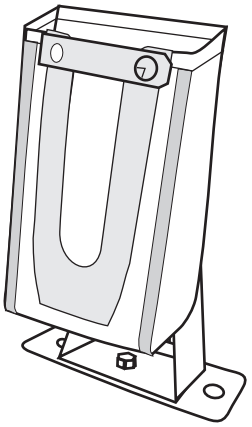

SR 61

INTERMEC

TERMINAL HOLSTER

8008

FOR ***INTERMEC CN2***

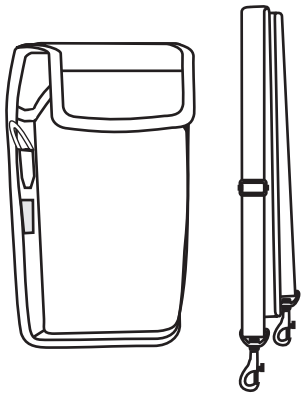

WITH MILITARY TYPE BELT HOLDER

TERMINAL CASE

8124

FOR INTERMEC **CN3**

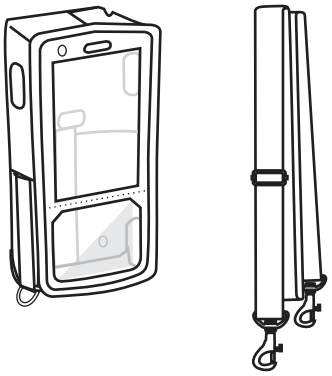

TERMINAL CASE

8124- DZ

FOR INTERMEC **CN3**
EASY DOCKING

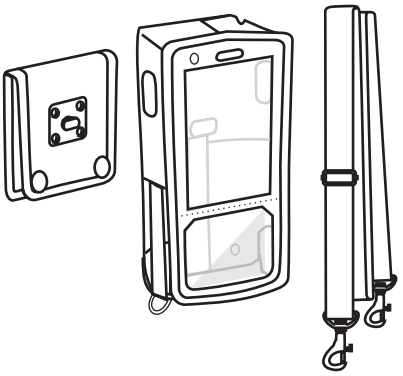

CN3
CN2

FULL LEATHER CASE

8124-LD

FOR INTERMEC **CN3**
EASY DOCKING

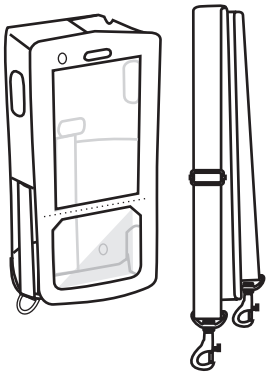

TERMINAL CASE

8124-DG

FOR INTERMEC **CN3**
EASY DOCKING

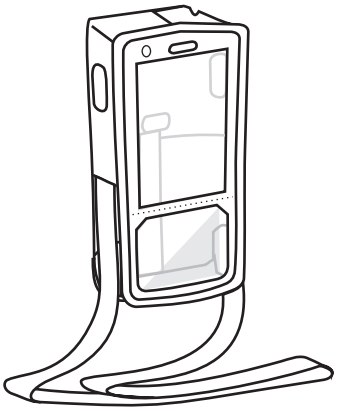

WITHOUT METAL PARTS

TERMINAL HOLSTER

8020

FOR ***INTERMEC CN3***

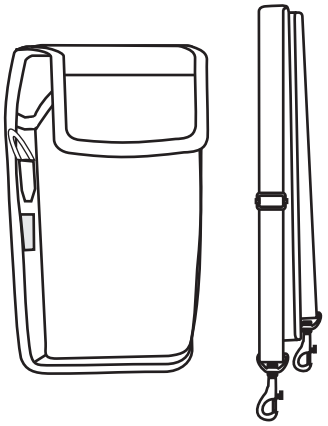

CN3

TERMINAL CASE

8133-D

FOR INTERMEC **CN3e**
EASY DOCKING

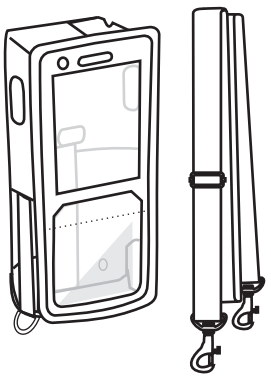

TERMINAL HOLSTER

8027-B

FOR ***INTERMEC CN3e***

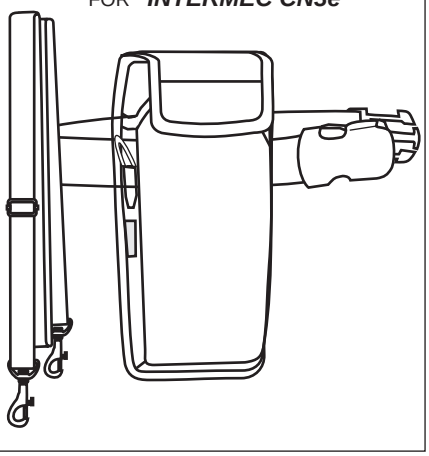

CN3
CN3e

INTERMEC

TERMINAL HOLSTER
8053
FOR ***INTERMEC CN50***

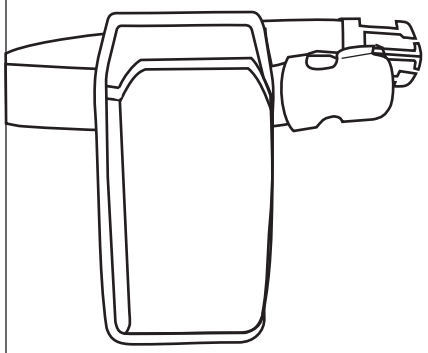

TERMINAL HOLSTER
8054
FOR ***MINTERMEC CN50***

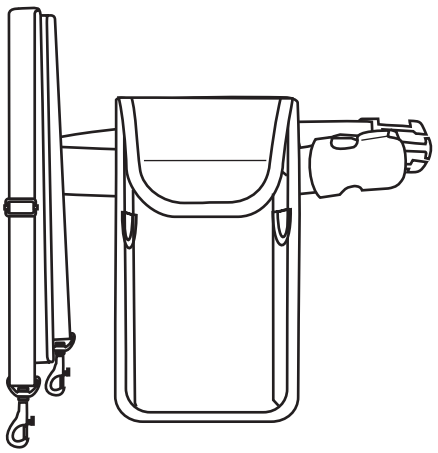

TERMINAL CASE
8160
FOR INTERMEC ***CN50***

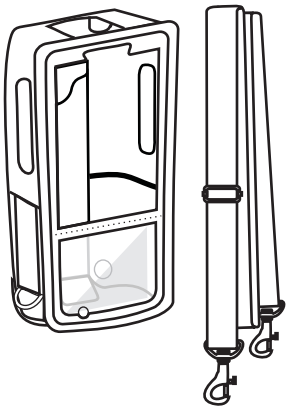

CN50

TERMINAL CASE
8173-DZ
FOR INTERMEC **CN4**
EASY DOCKING

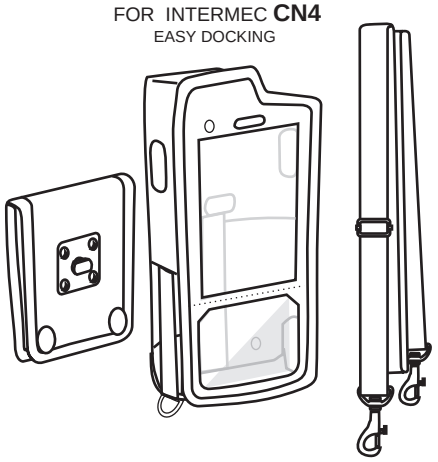

TERMINAL HOLSTER
8072
FOR ***INTERMEC SF51***

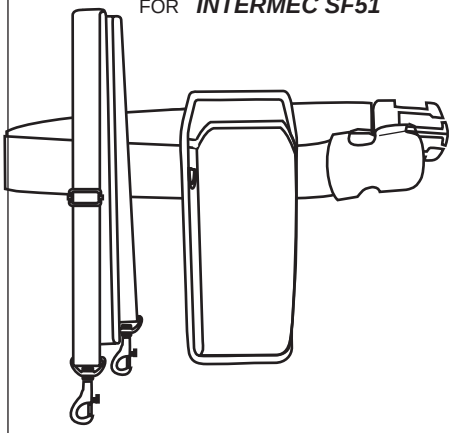

SF 51

CN4

TERMINAL HOLSTER
8073
FOR ***INTERMEC SF51***

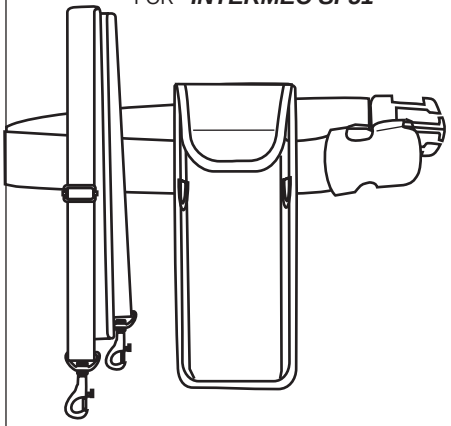

TERMINAL HOLSTER
8074
FOR ***INTERMEC SF51***

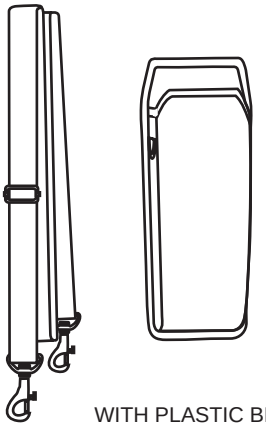

WITH PLASTIC BELT CLIP

TERMINAL HOLSTER
8075
FOR ***INTERMEC SF51***

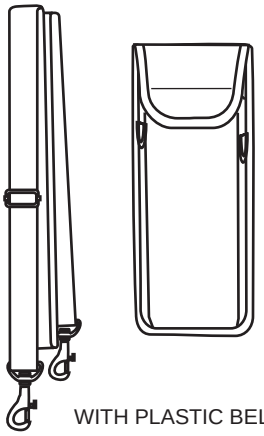

WITH PLASTIC BELT CLIP

SF 51

DATALOGIC

TERMINAL CASE

8109

FOR ***DATALOGIC VIPER-NET***

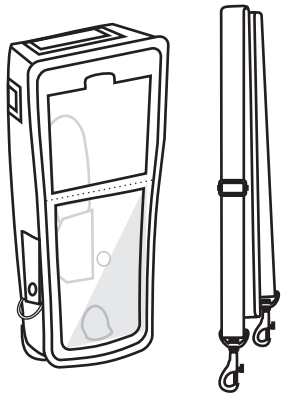

TERMINAL CASE

8109-XP

FOR ***VIPER*** - DATALOGIC

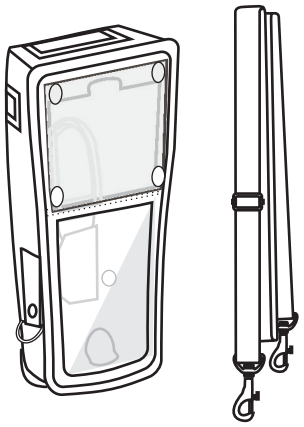

TERMINAL CASE

8123

FOR ***VIPER-DL 9600*** - DATALOGIC

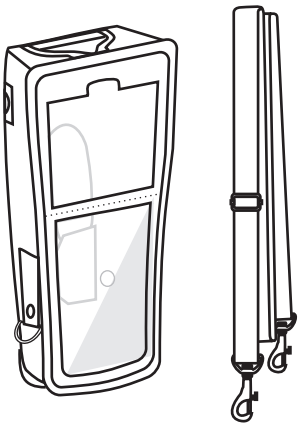

VIPER

HOLSTER

8003

FOR
MOTOROLA MC90xx series
DATALOGIC - ***VIPER***

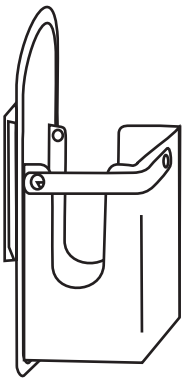

WITH MILITARY TYPE BELT HOLDER

UNIVERSAL HOLSTER with 2 belts

8004

FOR
MOTOROLA ***MC90xx - G***
DATALOGIC - ***VIPER***
INTERMEC - ***CK30***
LXE - ***MX 9***

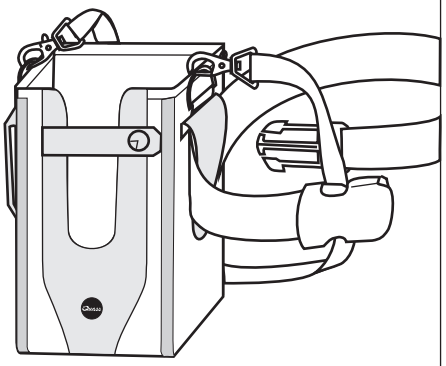

VEHICLE MOUNT HOLSTER

8004-VM

FOR MOTOROLA ***MC90xx***
DATALOGIC - ***VIPER*** INTERMEC - ***CK30***

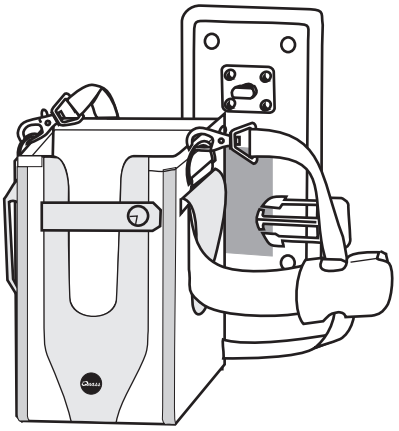

VIPER

2-AXIES VEHICLE MOUNT HOLSTER

8004-SVM

FOR MOTOROLA ***MC90xx***
DATALOGIC - ***VIPER*** INTERMEC - ***CK30***

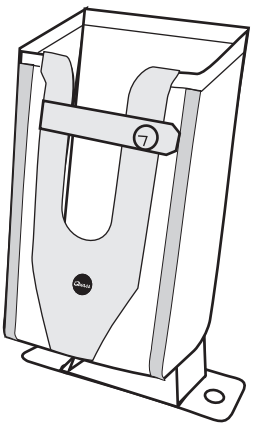

2-AXIES VEHICLE MOUNT HOLSTER - REVERSE

8004-SVM-R

FOR MOTOROLA ***MC90xx G***
DATALOGIC - ***VIPER*** INTERMEC - ***CK30***

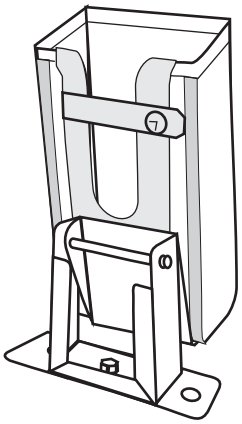

VIPER

DATALOGIC

TERMINAL CASE
8132-D
FOR ***DATALOGIC JET***
EASY DOCKING

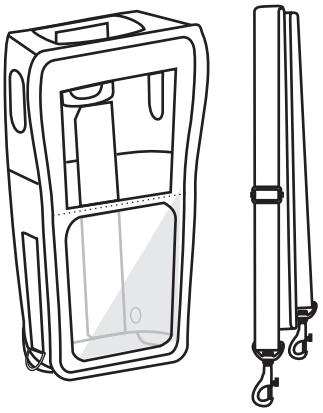

TERMINAL HOLSTER
8022
FOR ***DATALOGIC JET***

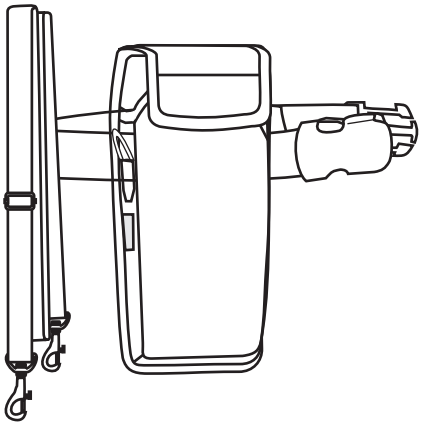

TERMINAL HOLSTER
8035
FOR ***DATALOGIC SKORPIO***
DATALOGIC JET

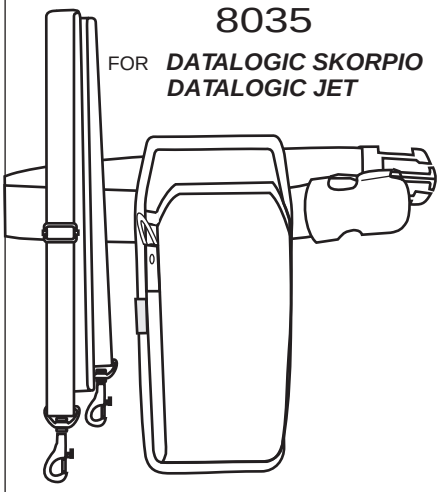

TERMINAL CASE
8117
FOR ***DATALOGIC SKORPIO***

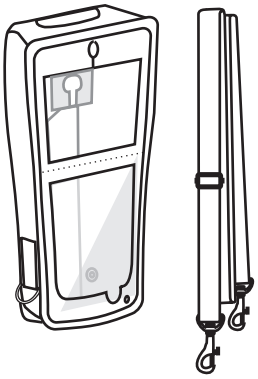

TERMINAL CASE
8117-DZ
FOR ***DATALOGIC SKORPIO***
EASY DOCKING

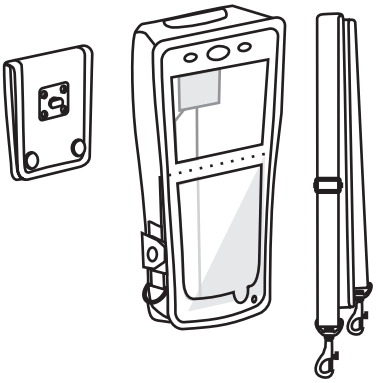

TERMINAL CASE
8134
FOR ***DATALOGIC SKORPIO***
WITH PISTOL GRIP

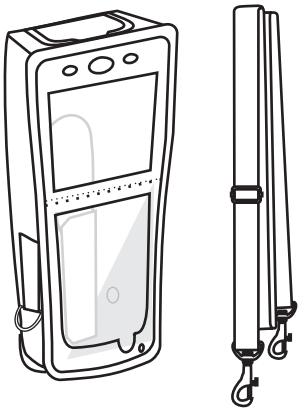

TERMINAL CASE
8134-D
FOR ***DATALOGIC SKORPIO***
WITH PISTOL GRIP - for EASY DOCKING

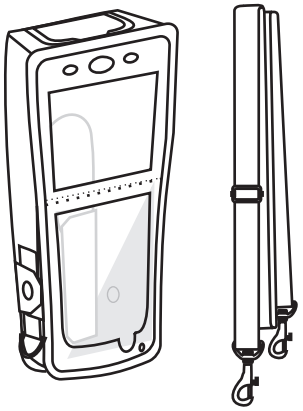

HOLSTER with 2 belts
8019
FOR MOTOROLA ***MC30xx G***
DATALOGIC SKORPIO GUN
DATALOGIC KYMAN
WITH PISTOL GRIP

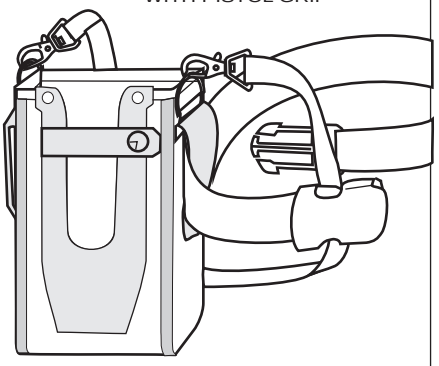

other options of the 8019 on page 4

2-AXIES VEHICLE MOUNT HOLSTER
8019-SVM
FOR MOTOROLA ***MC30xx G***
DATALOGIC SKORPIO GUN
DATALOGIC KYMAN
INTERMEC CK3
WITH PISTOL GRIP

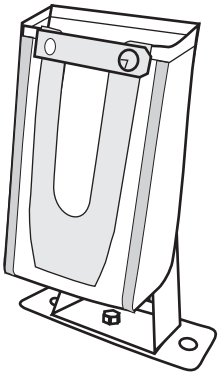

JET SKORPIO SKORPIO GUN SKORPIO GUN KYMAN

DATALOGIC

TERMINAL HOLSTER

8042

FOR ***DATALOGIC KYMAN*** BRICK

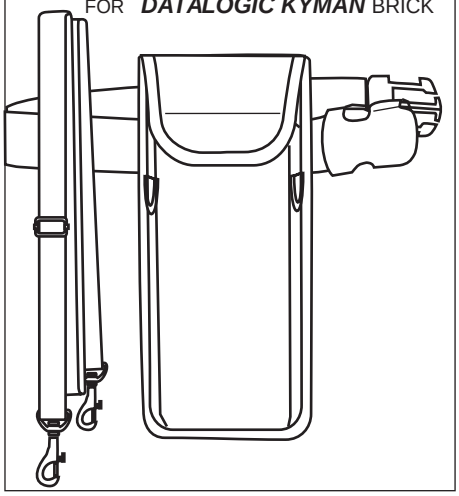

TERMINAL HOLSTER

8041

FOR ***DATALOGIC KYMAN*** BRICK

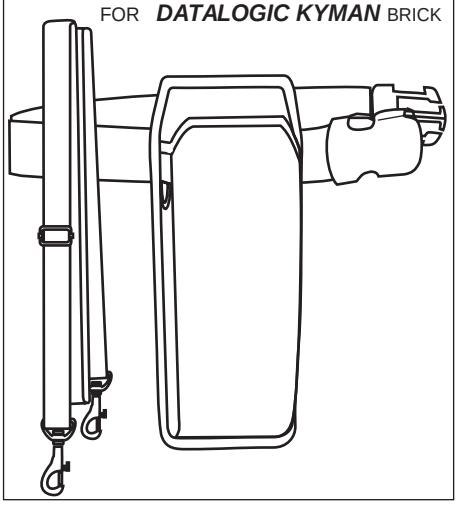

8122

FOR ***DATALOGIC KYMAN***
WITH PISTOL GRIP

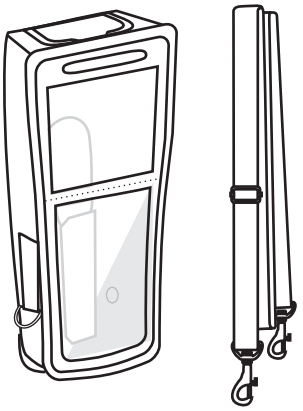

KYMAN

TERMINAL CASE

8172

FOR ***DATALOGIC KYMAN*** BRICK

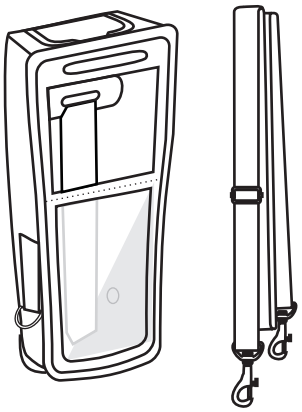

LEATHER TERMINAL CASE

8141-LD

FOR ***DATALOGIC MEMOR***

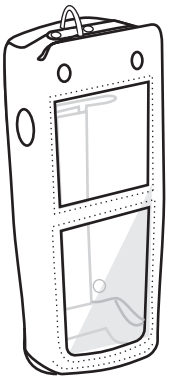

KYMAN

MEMOR

TERMINAL CASE

8119

FOR ***DATALOGIC MEMOR***

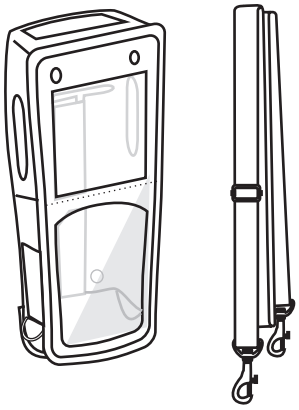

TERMINAL CASE

8119 - D

FOR ***DATALOGIC MEMOR***
EASY DOCKING

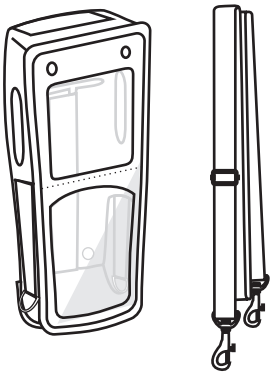

TERMINAL CASE

8147

FOR ***DATALOGIC MEMOR***
WITH EXTENDED BATTERY 2000 mAh

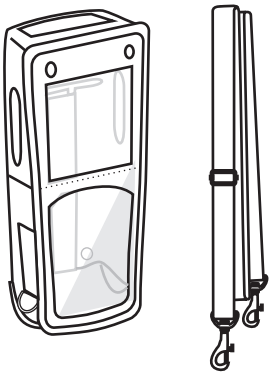

MEMOR

DATALOGIC

TERMINAL CASE

8154

FOR ***DATALOGIC MEMOR 2009***

(NORMAL / EXTENDED BATTERY)

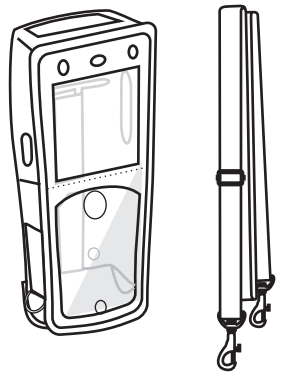

TERMINAL CASE

8154 - D

FOR ***DATALOGIC MEMOR 2009***

(NORMAL / EXTENDED BATTERY)

EASY DOCKING

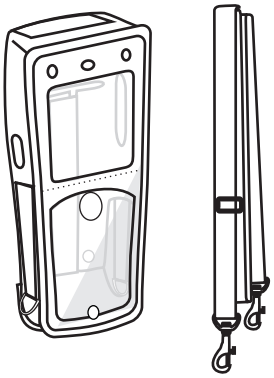

LEATHER TERMINAL CASE

8154-O

FOR ***DATALOGIC MEMOR 2009***

(NORMAL / EXTENDED BATTERY)

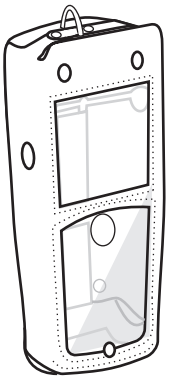

MEMOR model 2009

TERMINAL HOLSTER

8033

FOR ***NORDICID MORPHIC, DATALOGIC MEMOR, MEMOR model 2009***

(NORMAL / EXTENDED BATTERY)

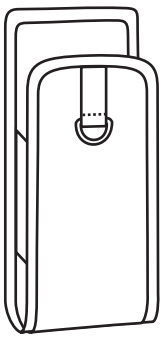

TERMINAL HOLSTER

8080

FOR ***DATALOGIC MEMOR***

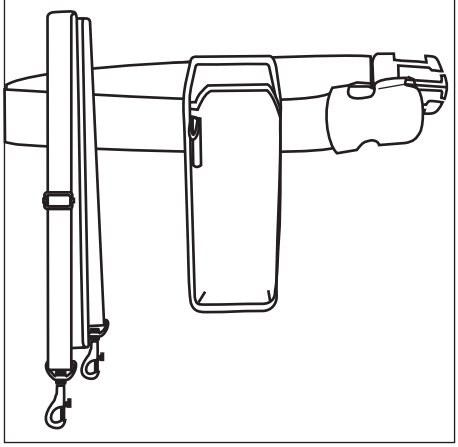

TERMINAL HOLSTER

8081

FOR ***DATALOGIC MEMOR***

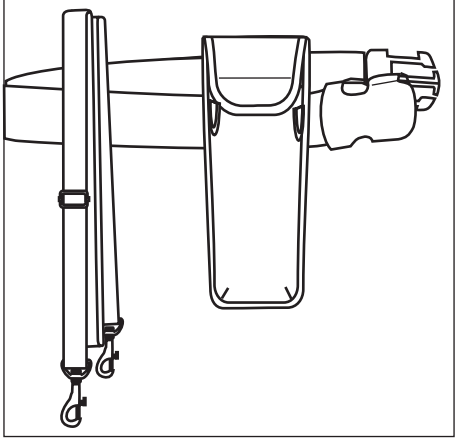

MEMOR model 2009

HOLSTER

8068

DATALOGIC **DRAGON M**

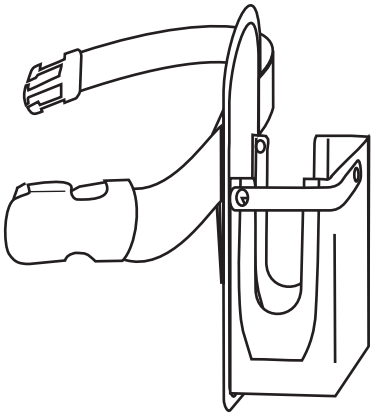

DRAGON M

DATALOGIC

TERMINAL CASE
8144
FOR ***DATALOGIC PEGASO***

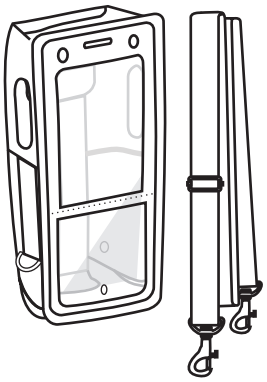

TERMINAL CASE
8144-Z
FOR ***DATALOGIC PEGASO***

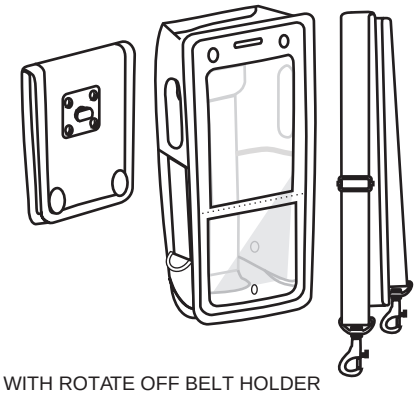

WITH ROTATE OFF BELT HOLDER

TERMINAL CASE
8144-D
FOR ***DATALOGIC PEGASO***
EASY DOCKING

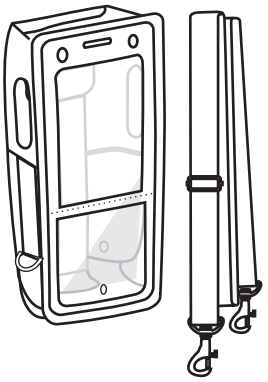

TERMINAL CASE
8145
FOR ***DATALOGIC PEGASO***
WITH HANDLE

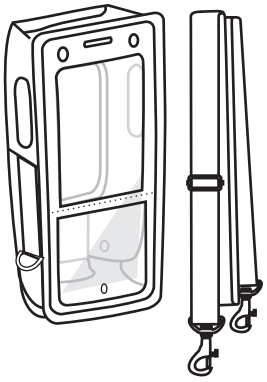

TERMINAL HOLSTER
8036
FOR ***DATALOGIC PEGASO***

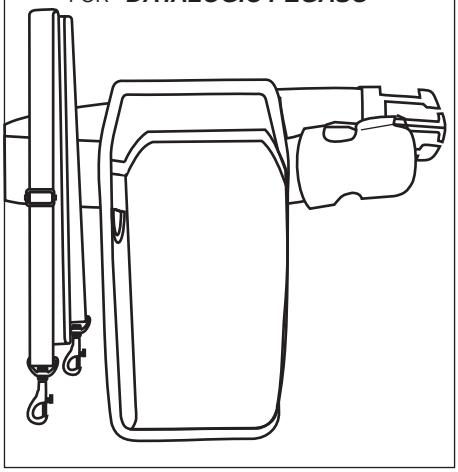

TERMINAL HOLSTER
8037
FOR ***DATALOGIC PEGASO***

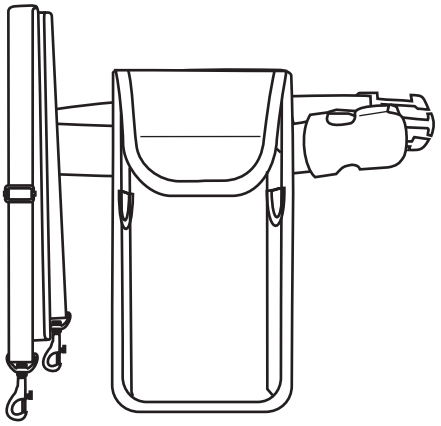

PEGASO

HOLSTER with 2 belts
8038
FOR ***DATALOGIC PEGASO*** with handle

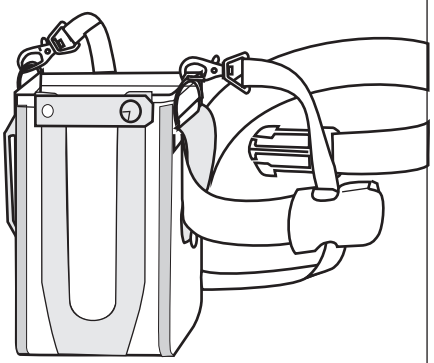

PROTECTIVE BOOT
1006
FOR ***DATALOGIC GRYPHON I***

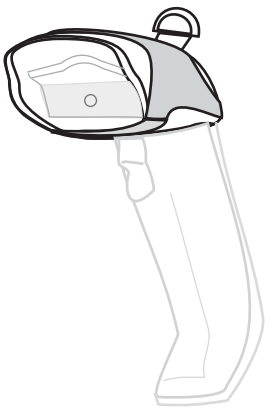

HOLSTER with 2 belts
8045
FOR DATALOGIC ***GRYPHON I***

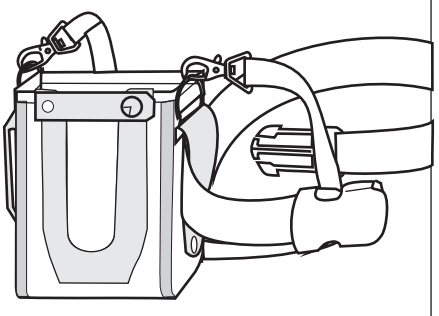

PEGASO GRYPHON I

PSC

FALCON 4220 PDA

TERMINAL CASE
8101
FOR ***PSC FALCON 4220 PDA***

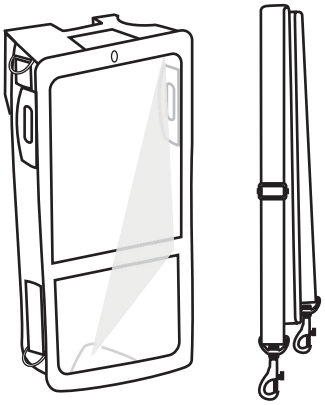

TERMINAL CASE
8103
FOR ***PSC FALCON 4220 PDA***

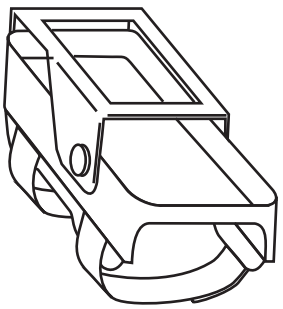

TERMINAL CASE
8006
FOR ***PSC FALCON 4220 PDA***

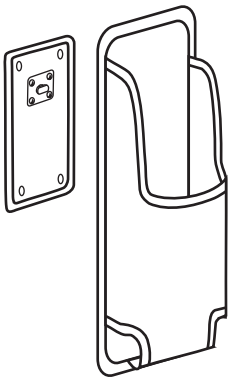

WITH CAR / TROLLEY / FORK-LIFT TRUCK ROTATE HOLDER

FALCON 345 FALCON 4420

TERMINAL CASE
8126-Z
FOR PSC ***FALCON 345***

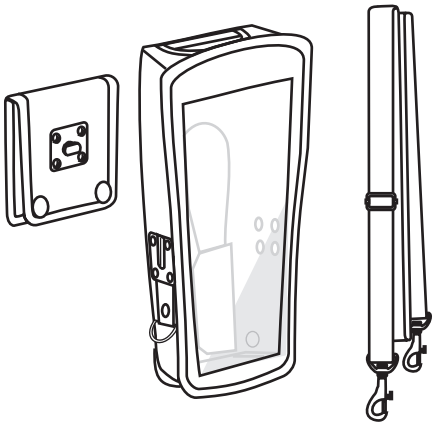

TERMINAL CASE
8126-D
FOR PSC ***FALCON 345***
EASY DOCKING

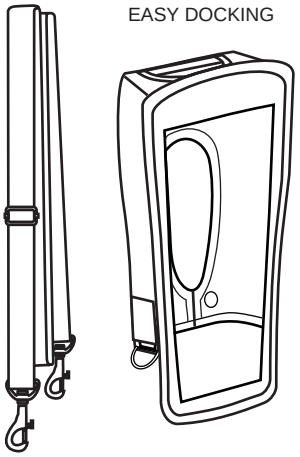

TERMINAL CASE
8127-Z
FOR PSC ***FALCON 4420***

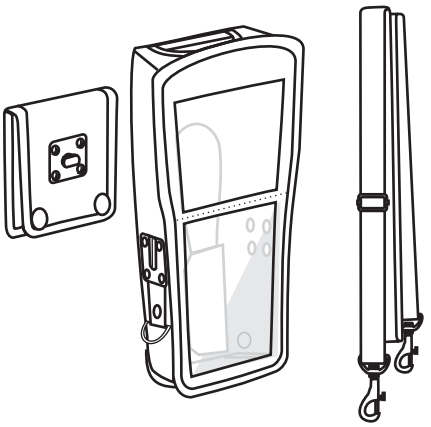

POWERSCAN

HOLSTER
8007
FOR SCANNERS:
MOTOROLA **Pxxx** series **,** PSC **POWERSCAN**

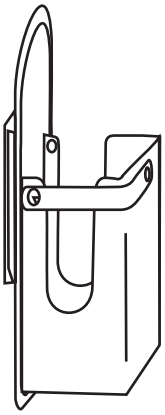

WITH MILITARY TYPE BELT HOLDER

HOLSTER
8007-B
FOR SCANNERS:
MOTOROLA **PXXX** bar code scanners series,
PSC **POWERSCAN**

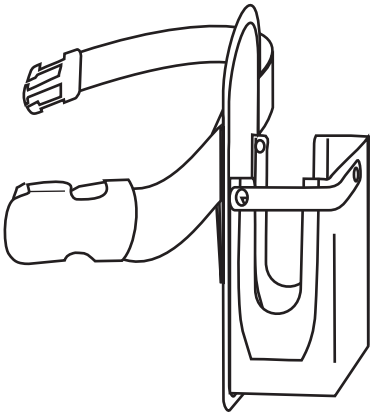

PIDION

TERMINAL CASE

8166

FOR **PIDION BIP 5000** SERIES

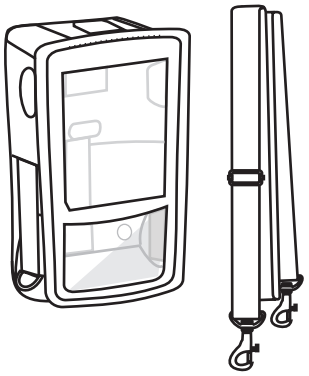

TERMINAL CASE

8166-ZXP

FOR **PIDION BIP 5000** SERIES

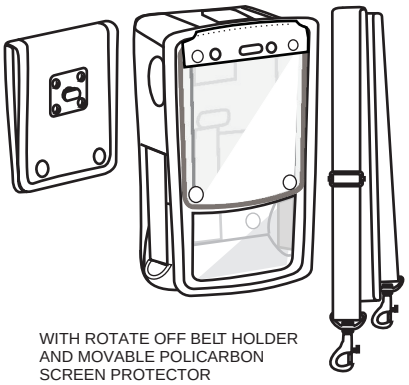

WITH ROTATE OFF BELT HOLDER
AND MOVABLE POLICARBON
SCREEN PROTECTOR

TERMINAL HOLSTER

8070

FOR **PIDION BIP 5000** SERIES

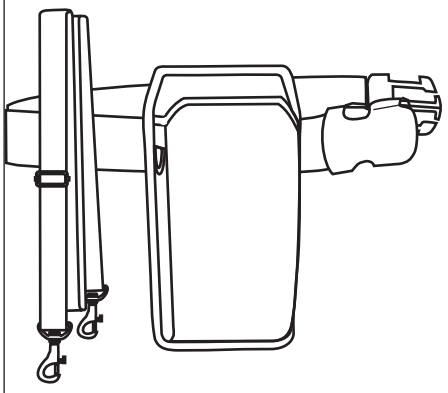

BIP 5000

TERMINAL HOLSTER

8071

FOR **PIDION BIP 5000** SERIES

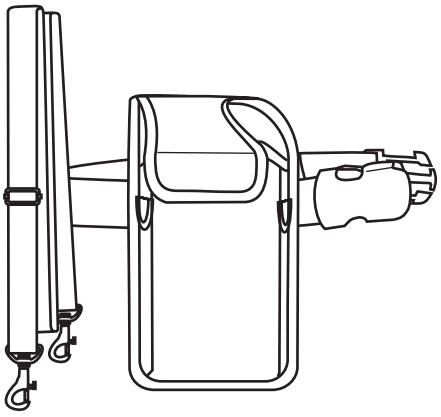

TERMINAL CASE

8176

FOR PIDION ***BIP-7000 PLUS***

UNIVERSAL FOR STANDARD AND EXTENDED BATTERY

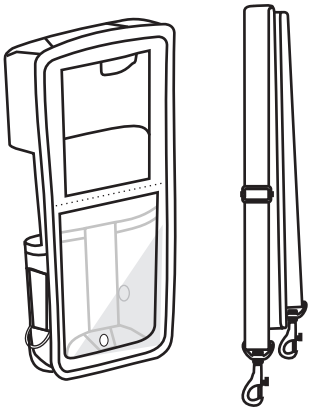

BIP 5000

TERMINAL CASE

8177

FOR PIDION ***BIP-7000***

UNIVERSAL FOR STANDARD AND EXTENDED BATTERY

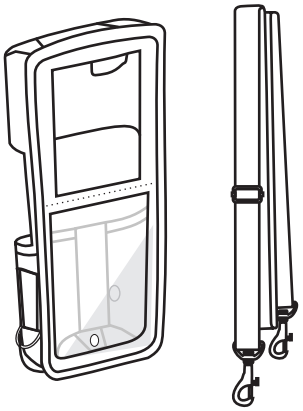

TERMINAL HOLSTER

8083

FOR ***PIDION BIP-7000/7000 PLUS***

UNIVERSAL FOR STANDARD AND EXTENDED BATTERY

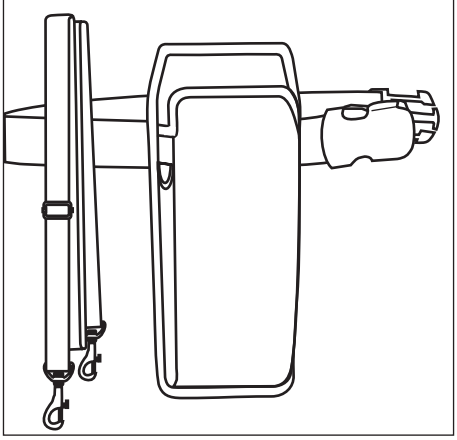

TERMINAL HOLSTER

8084

FOR ***PIDION BIP-7000/7000 PLUS***

UNIVERSAL FOR STANDARD AND EXTENDED BATTERY

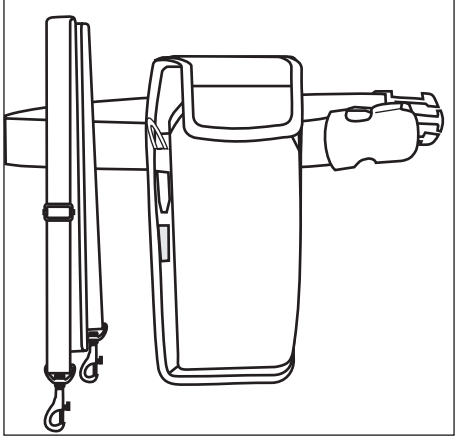

MOBILE COMPIA CIPHERLAB

TERMINAL HOLSTER

9001

FOR ***MOBILE COMPIA M3,MC7500S***

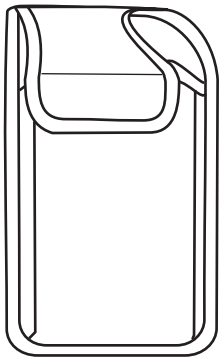

WITH MILITARY TYPE BELT HOLDER

TERMINAL HOLSTER

9002

FOR ***MOBILE COMPIA M3, MC7500S***

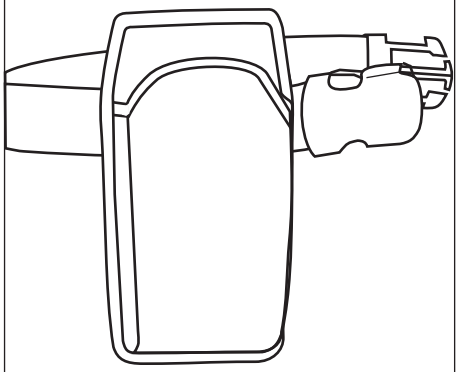

TERMINAL HOLSTER

9005

FOR ***MOBILE COMPIA M3, MC7500S***

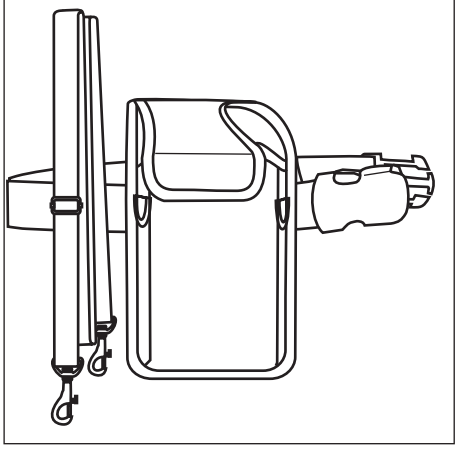

MOBILE COMPIA M3 MC 7500S

TERMINAL CASE

8143

FOR MOBILE COMPIA **M3**

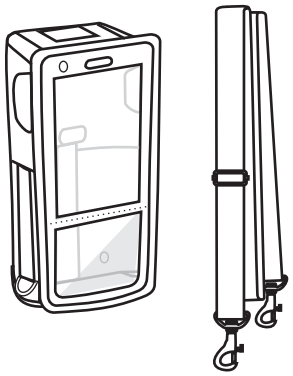

TERMINAL CASE

8143-XPZ

FOR MOBILE COMPIA **M3**

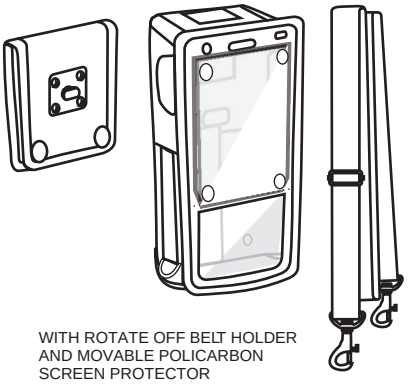

WITH ROTATE OFF BELT HOLDER
AND MOVABLE POLICARBON
SCREEN PROTECTOR

TERMINAL CASE

8143 D

FOR MOBILE COMPIA **M3**
EASY DOCKING

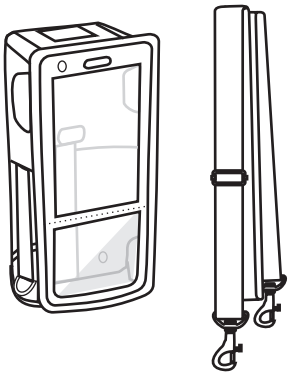

MOBILE COMPIA M3

LEATHER TERMINAL CASE

8153-O

FOR ***CIPHERLAB 8001-C***

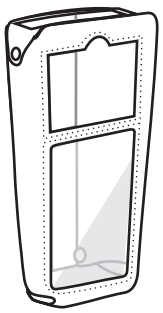

TERMINAL HOLSTER

8044

FOR ***CIPHERLAB 8001-C***

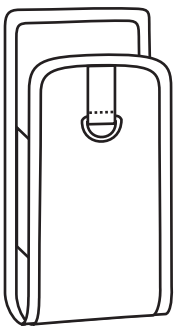

CIPHERLAB 8001

ARGOX XPLORE OPTICON HTC TWINHEAD

TERMINAL CASE
8128
FOR ***OPTICON H 19A***

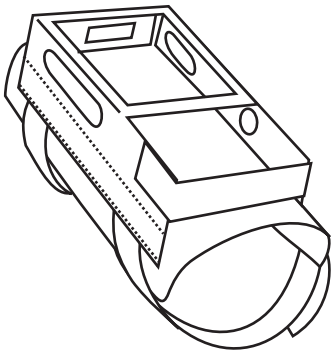

LEATHERCASE WITH HAND STRAP
8168
FOR ***HTC***

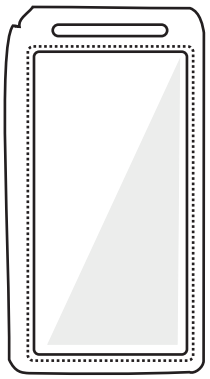

TERMINAL CASE
8121
FOR ***ARGOX PT12***

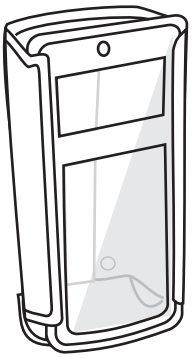

LEATHER CASE
9524
FOR ***TWIHEAD DIGIHEAL*** TABLET
EASY DOCKING

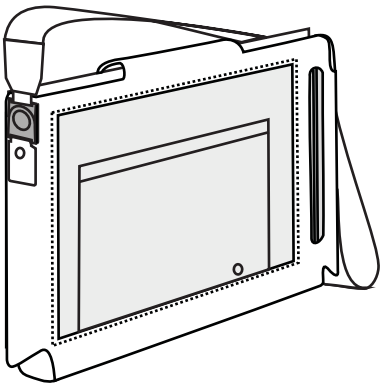

9502
FOR ***XPLORE*** TABLET
EASY DOCKING

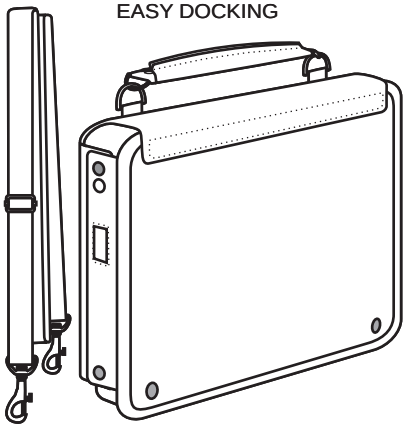

BAG WITH POLICARBON SCREEN PROTECTOR
9502-GP
FOR ***XPLORE*** TABLET
EASY DOCKING

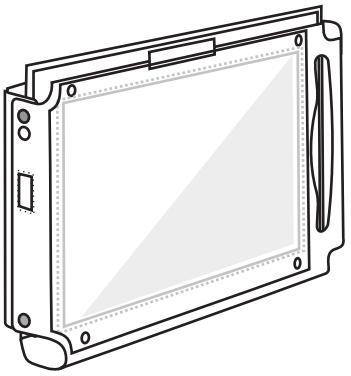

NEOPRENE PROTECTIVE BOOT
1001
FOR ***TOHKEN THIR6000U***

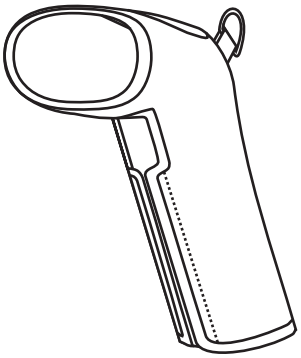

PROTECTIVE BOOT
1002
FOR ***TOHKEN THIR6000U***

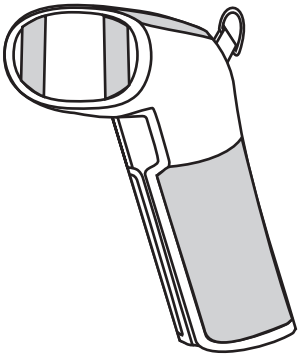

CASIO

TERMINAL CASE
5105
FOR ***CASIO DT-X7***

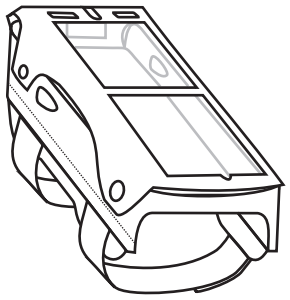

TERMINAL HOLSTER
5003
FOR ***CASIO DT-X 7***

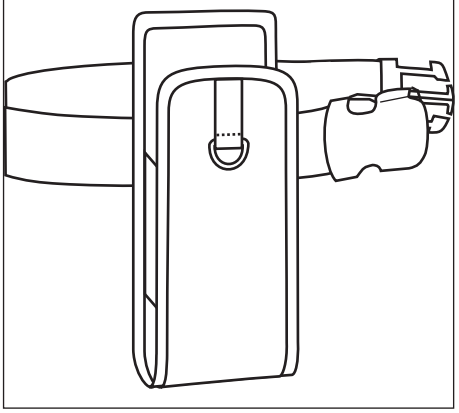

DT-X7

TERMINAL HOLSTER
5001
FOR ***CASIO DT-X10, DT-X11***

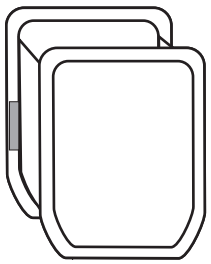

TERMINAL HOLSTER
5002
FOR ***CASIO DT-X10, DT-X11***

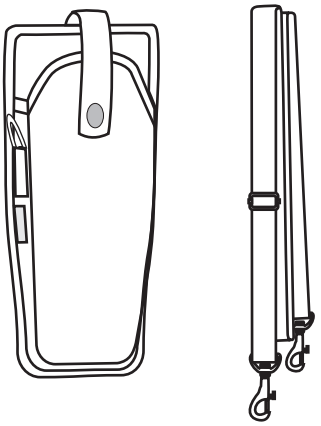

TERMINAL CASE
5102-Z
FOR ***CASIO DT-X10, DT-X11***

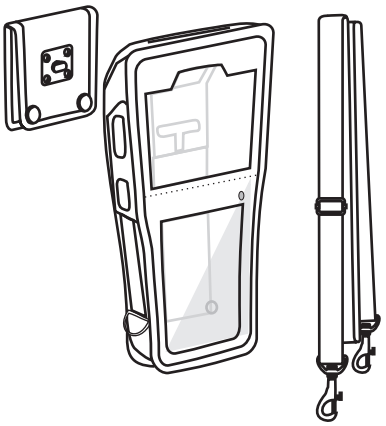

DT-X10 DT-X11

TERMINAL CASE
5103-Z
FOR ***CASIO DT-X10, DT-X11***
with **DT-892 TCV**

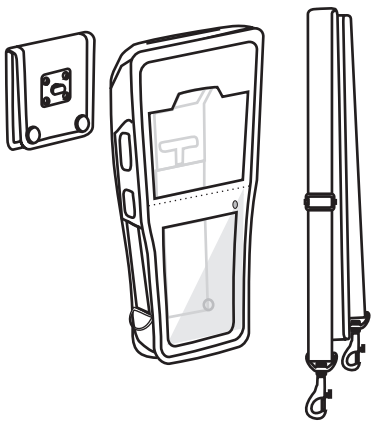

TERMINAL CASE
5109
FOR ***CASIO*** **DT-X10, DT-X11**
with **DT 892 TCV** and **DT 894 CFU** Card Extension Unit

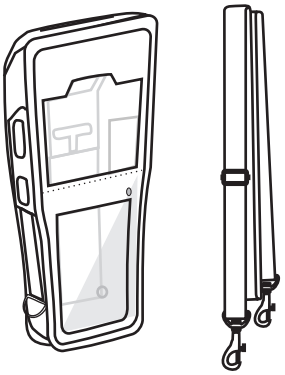

DT-X10 DT-X11

CASIO

TERMINAL CASE
5107
FOR ***CASIO*** **DT-X30**

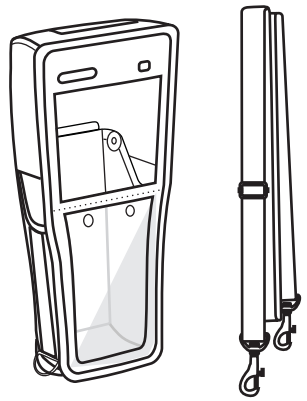

TERMINAL CASE
5107-Z
FOR ***CASIO*** **DT-X30**

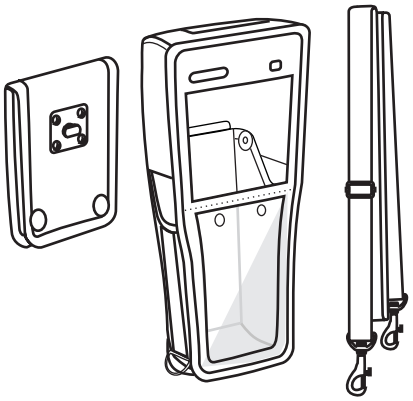

TERMINAL CASE
5107-D
FOR ***CASIO*** **DT-X30**
EASY DOCKING

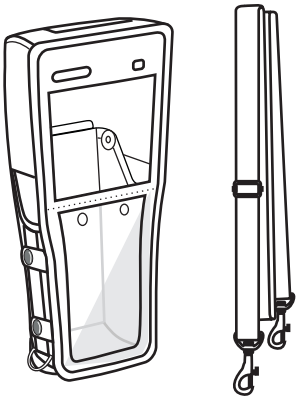

DT-X30

TERMINAL CASE
5107-DZ
FOR ***CASIO*** **DT-X30**
EASY DOCKING

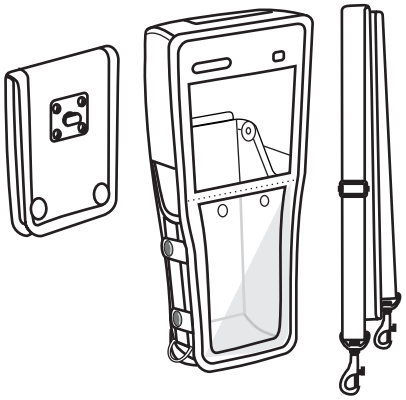

2-AXIES VEHICLE MOUNT HOLSTER
5004-SVM
FOR ***CASIO*** **DT-X30**

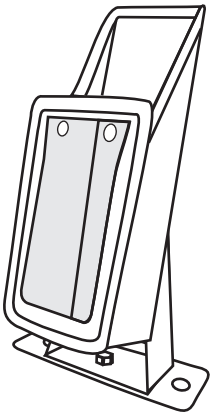

UNIVERSAL TERMINAL HOLSTER
8040
FOR ***INTERMEC CK3***
PSION WORKABOUT PRO
CASIO DT-X30

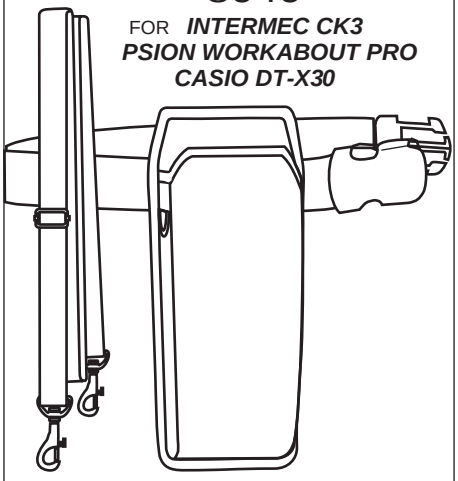

DT-X30

UNIVERSAL TERMINAL HOLSTER
8039
FOR ***INTERMEC CK3,***
PSION WORKABOUT PRO
CASIO DT-X30

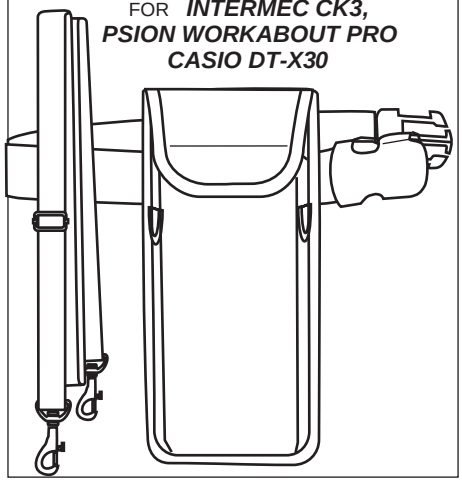

TERMINAL CASE
5104
FOR ***CASIO CASSIOPEIA IT-600***

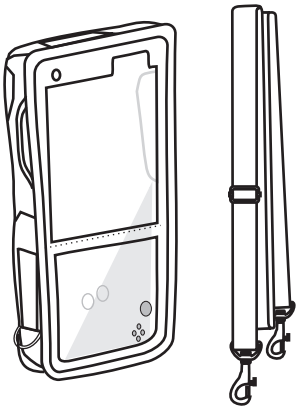

TERMINAL CASE
5101
FOR ***CASIO CASSIOPEIA IT-600***
WITH GRIP HA-D51TG

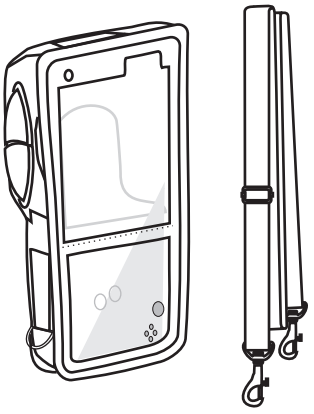

DT-X30

CASSIOPEIA IT-600

CASIO

TERMINAL CASE

5110-iID

FOR SYMBOL ***CASIO iT 800 RGC***
WITH **MICROSENSYS** iID CONTACTLESS

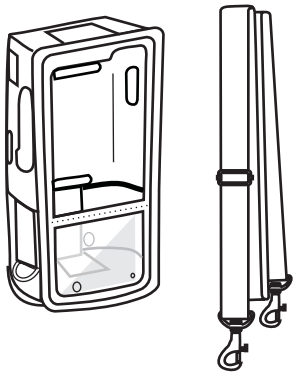

TERMINAL HOLSTER

5005

FOR ***CASIO IT800 RGC***
(STANDARD/ EXTENDED BATTERY)
CASIO IT800 RC (EXTENDED BATTERY)

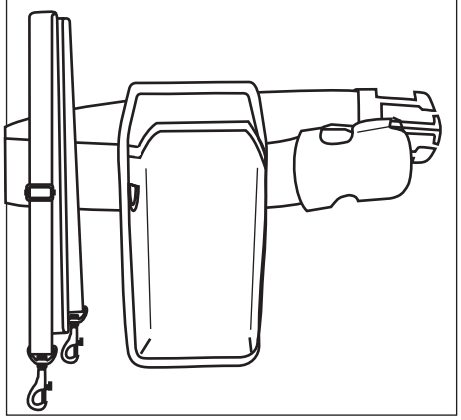

TERMINAL HOLSTER

5006

FOR ***CASIO IT800 RGC***
(STANDARD/ EXTENDED BATTERY)
CASIO IT800 RC (EXTENDED BATTERY)

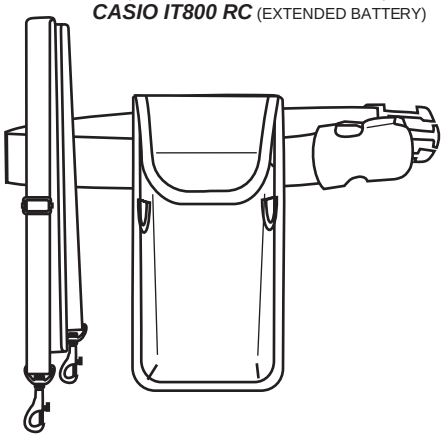

IT 800

TERMINAL CASE

5106

FOR CASIO ***IT 3000***

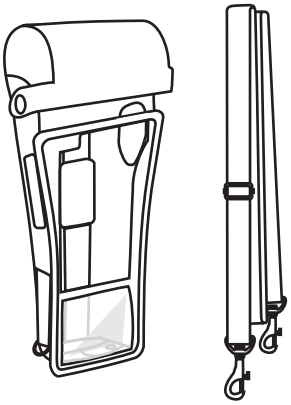

SHOULDER BAG

5201

FOR CASIO ***IT 3000***

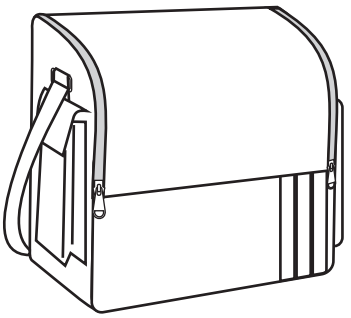

IT 3000

SHOULDER BAG

5202

FOR CASIO ***IT 3000***

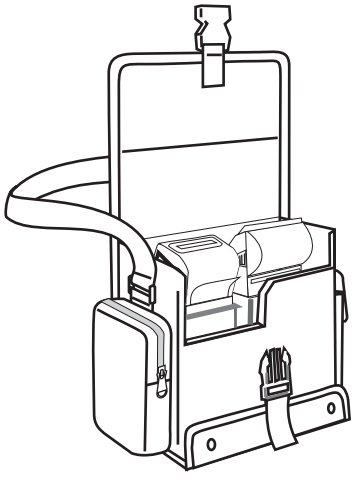

SHOULDER BAG

5203

FOR CASIO ***IT 3000***
+ EXTRA PRINTER + PINPAD

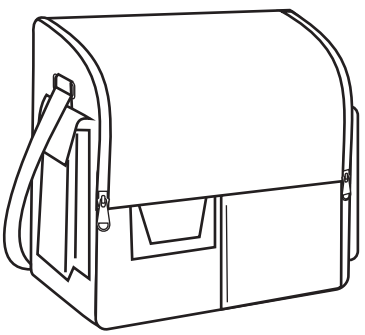

SHOULDER BAG

5204

FOR CASIO ***IT 3000***

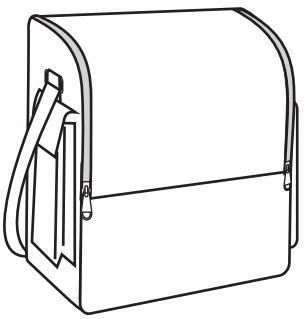

CASIO - IT 3000

FUJITSU-SIEMENS

SHOULDER BAG

9504

FOR ***FUJITSU-SIEMENS LIFEBOOK P 1610***

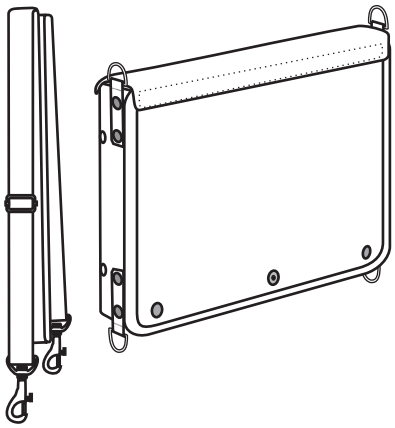

SHOULDER BAG

9503

FOR ***FUJITSU-SIEMENS LIFEBOOK P 1620***

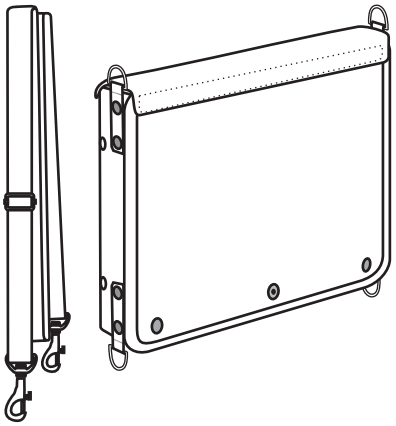

PRINTER CASE

9525

FOR ***MOTION F5v***

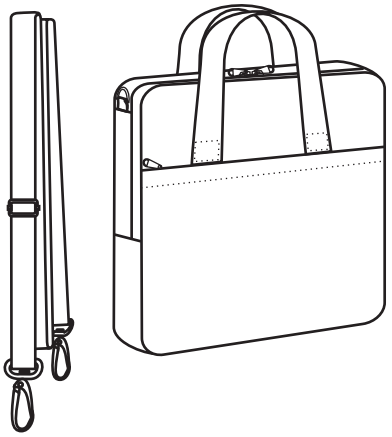

PSION TEKLOGIX

TERMINAL CASE

8152

FOR ***PSION - WORKABOUT PRO***

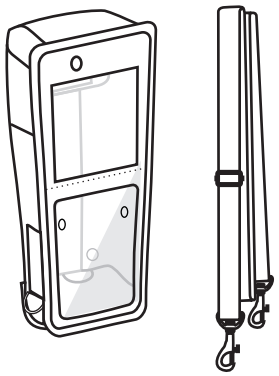

TERMINAL CASE

8152-O

FOR ***PSION - WORKABOUT PRO***

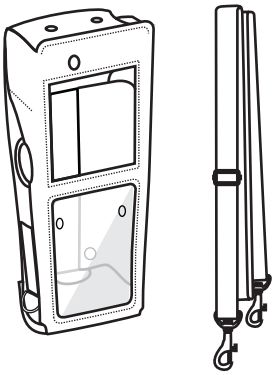

UNIVERSAL TERMINAL HOLSTER

8039

FOR ***INTERMEC CK3,***
PSION WORKABOUT PRO

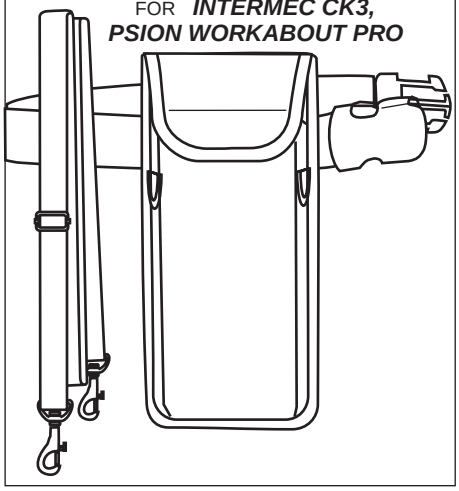

UNIVERSAL TERMINAL HOLSTER

8040

FOR ***INTERMEC CK3***
PSION WORKABOUT PRO

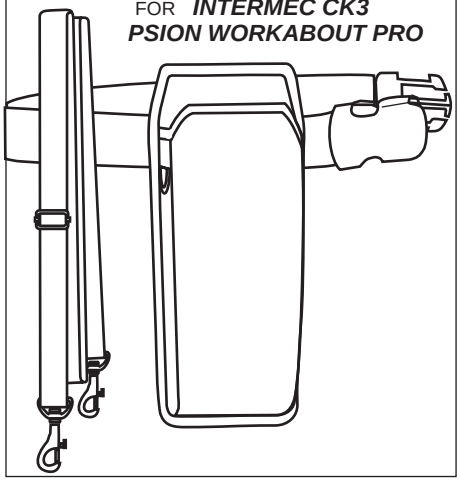

UNIVERSAL HOLSTER

8040-SVM

FOR ***INTERMEC CK3,***
PSION WORKABOUT PRO

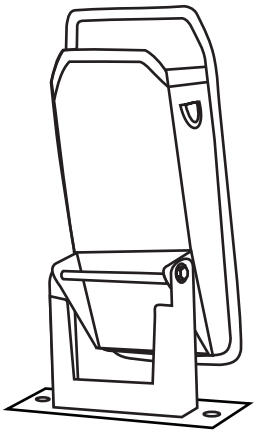

TERMINAL CASE

8135

FOR ***PSION - WORKABOUT PRO PDTP5S07***

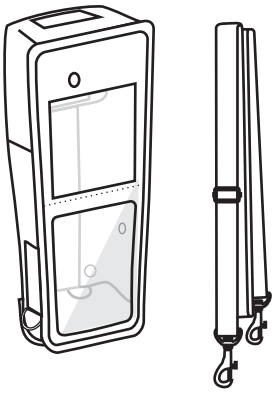

8140

FOR ***PSION - WORKABOUT PRO*** WITH **RS 232**

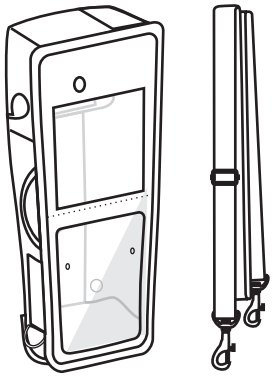

TERMINAL HOLSTER

8031

FOR ***PSION - WORKABOUT PRO PDTP5S07***

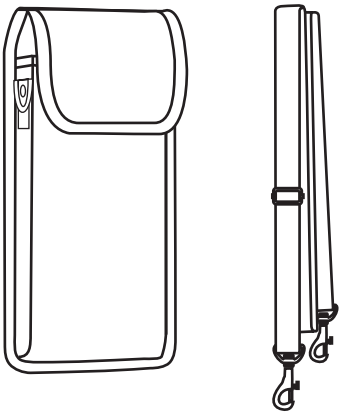

TERMINAL HOLSTER

8030

FOR ***PSION - WORKABOUT PRO PDTP5S07***
WITHIN 8135 CASE

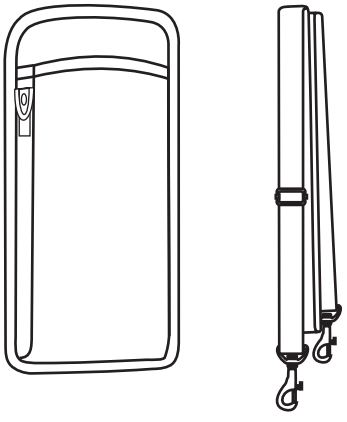

PSION - WORKABOUT PRO

PSION - WORKABOUT PRO

PSION - WORKABOUT PRO

PSION TEKLOGIX

PSION - WORKABOUT PRO 3

TERMINAL CASE
8174
FOR PSION TEKGLOGIX
WORKABOUT PRO 3
- WITH HANDLE

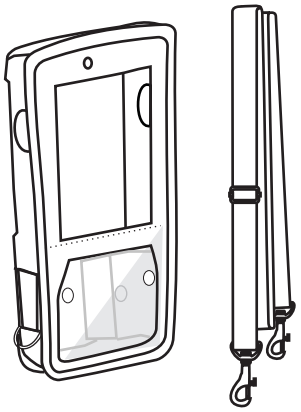

TERMINAL CASE
8175
FOR PSION TEKGLOGIX
WORKABOUT PRO 3 RFID
- WITH HANDLE

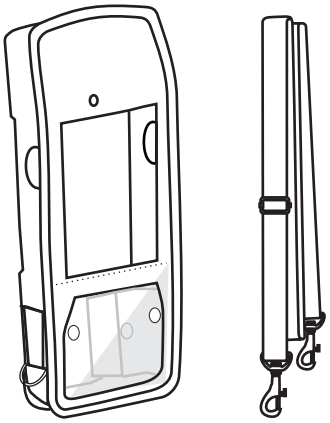

UNIVERSAL HOLSTER with 2 belts
8082
FOR PSION TEKGLOGIX
WORKABOUT PRO 3
- WITH HANDLE
WITH / WITHOUT RFID

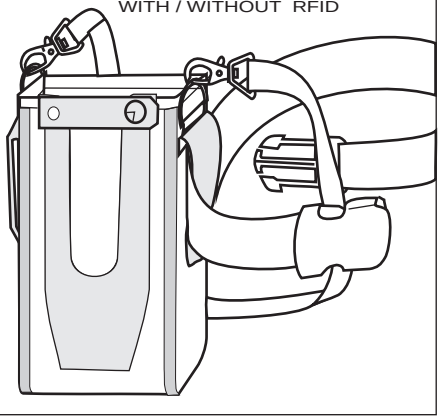

PSION IKON

TERMINAL CASE
8167
FOR **PSION IKON**

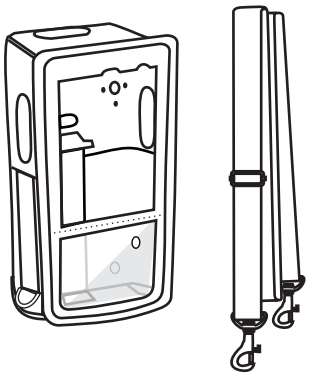

TERMINAL HOLSTER
8076
FOR **PSION IKON**

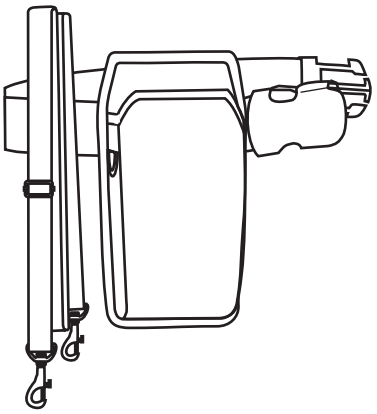

TERMINAL HOLSTER
8077
FOR **PSION IKON**

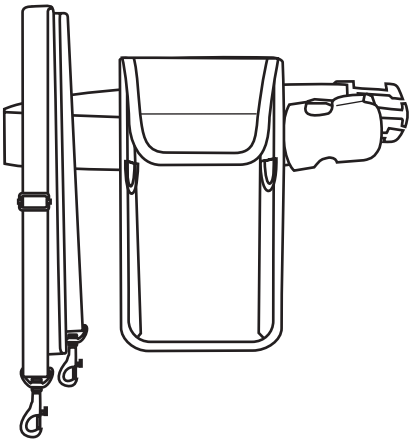

NORDICID

TERMINAL CASE
8137-P
FOR ***NORDICID PL 3000***

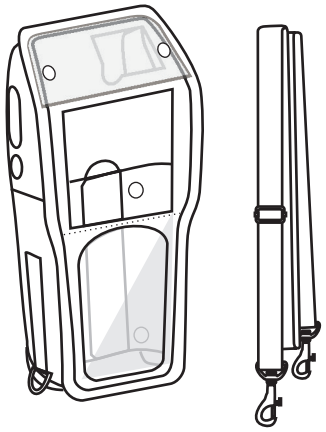

TERMINAL CASE
8138-P
FOR ***NORDICID PL 3000 with UHF***

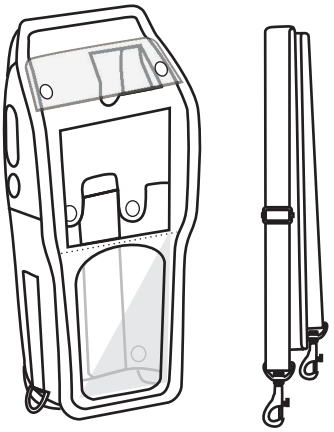

TERMINAL CASE
8138-ANFU
FOR ***NORDICID PL 3000 with RFID***

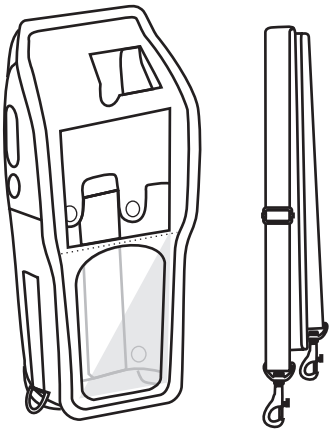

PL 3000

TERMINAL CASE
8138-AFU
FOR ***NORDICID PL 3000 with RFID***

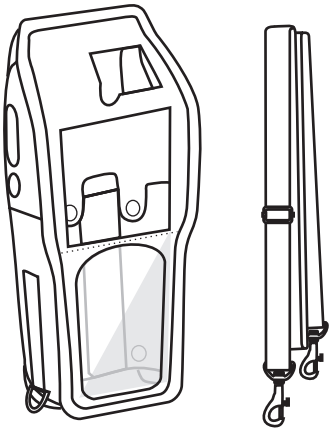

TERMINAL HOLSTER
8032
FOR ***NORDICID PL 3000***
UNIVERSAL - WITH/WITHOUT UHF

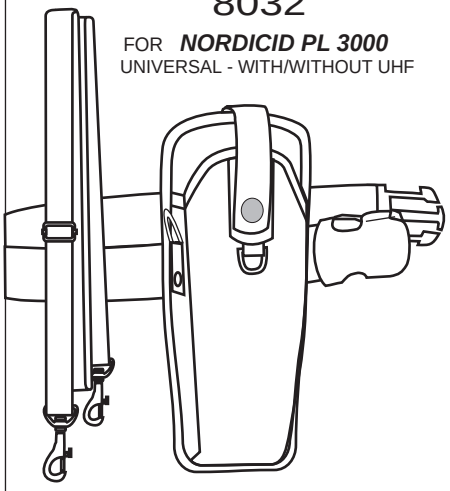

TERMINAL CASE
8162
FOR ***NORDICID RF6XX*** series

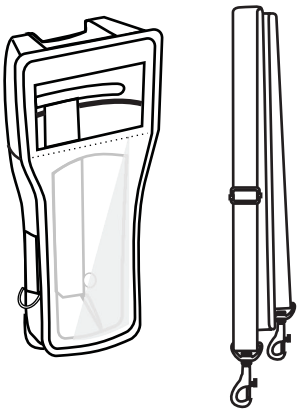

RF6XX PL 3000

TERMINAL CASE
8139
FOR ***NORDICID MORPHIC***

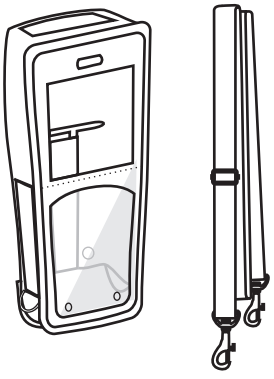

LEATHER TERMINAL CASE
8142-L
FOR ***NORDICID MORPHIC***

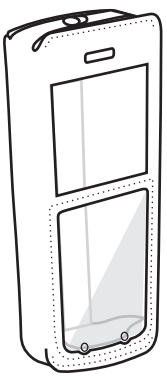

TERMINAL HOLSTER
8033
FOR ***NORDICID MORPHIC, DATALOGIC MEMOR***

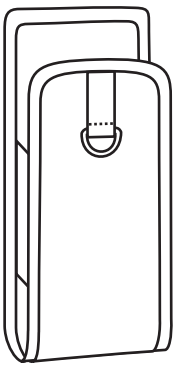

MORHIC

LXE

UNIVERSAL HOLSTER with 2 belts

8004-M

LXE ***MX7*** WITH PISTOL GRIP

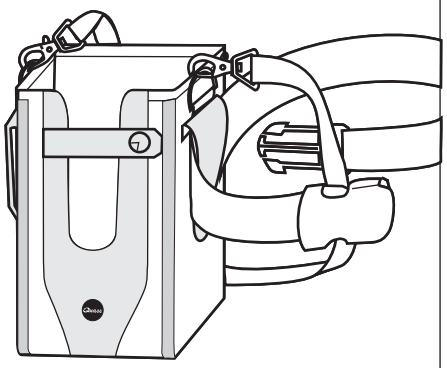

2-AXIES VEHICLE MOUNT HOLSTER

8004-MSVM

FOR ***LXE MX7*** WITH PISTOL GRIP

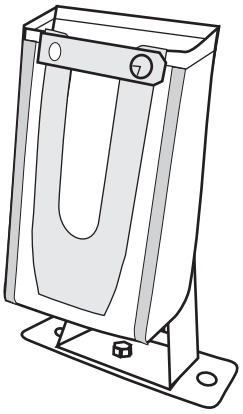

TERMINAL CASE

8156

FOR ***LXE MX8*** GUN

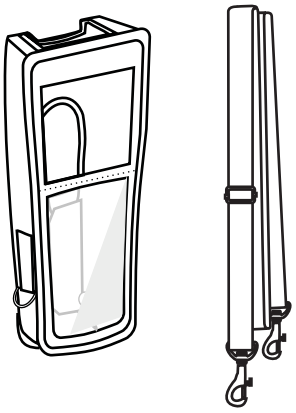

TERMINAL CASE

8156-BF

FOR ***LXE MX8*** GUN

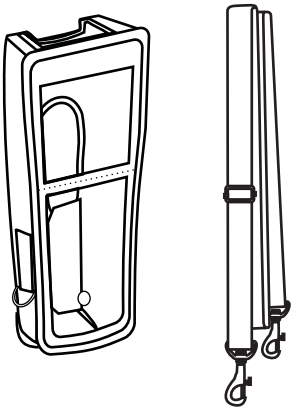

HOLSTER with 2 belts

8028

FOR ***LXE MX8 with grip***

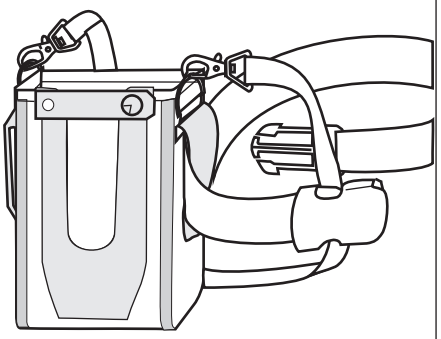

2-AXIES VEHICLE MOUNT HOLSTER

8028-SVM

FOR **LXE MX8 with grip**

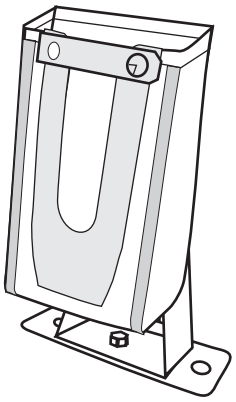

TERMINAL CASE

8157

FOR ***LXE MX8*** BRICK

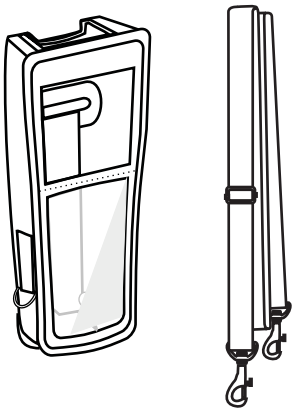

TERMINAL HOLSTER

8050

FOR ***LXE MX8***
HONEYWELL DOLPHIN 6500

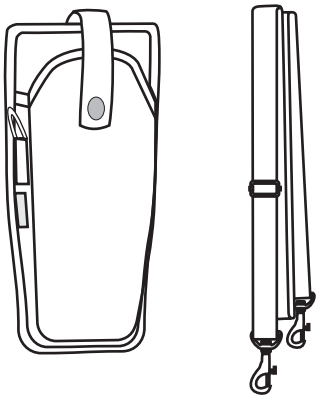

LXE MX7 GUN

LXE MX8 GUN

LXE MX8 BRICK

LXE MX8 GUN

LXE

TERMINAL CASE
8164
FOR ***LXE MX9***

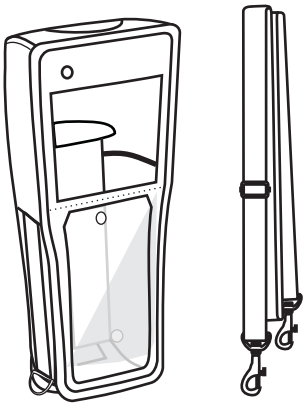

TERMINAL HOLSTER
8060
FOR ***LXE MX9***

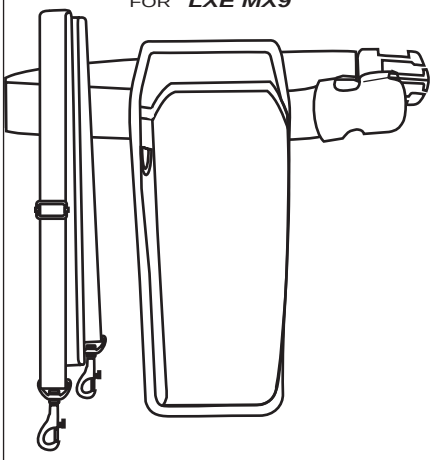

TERMINAL HOLSTER
8061
FOR ***LXE MX9***

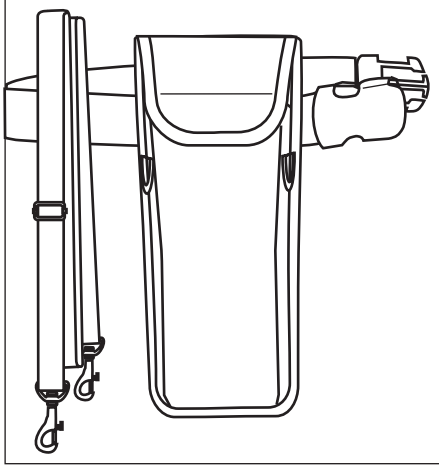

LXE MX9 BRICK

TERMINAL CASE
8165
FOR ***LXE MX9*** WITH GRIP

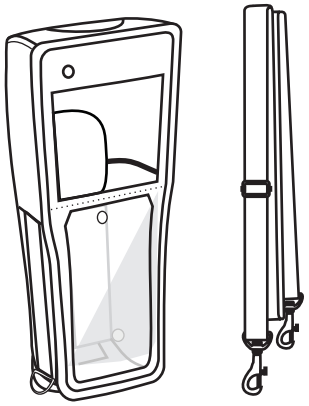

UNIVERSAL HOLSTER with 2 belts
8004
FOR
MOTOROLA ***MC90xx - G***
DATALOGIC - ***VIPER***
INTERMEC - ***CK30***
LXE - ***MX 9***

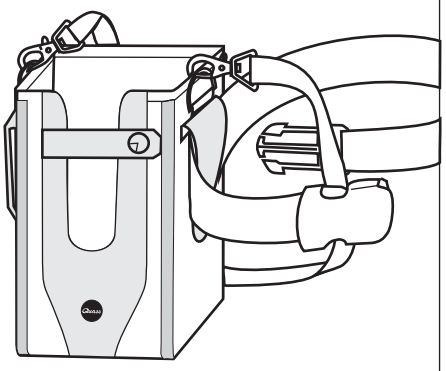

2-AXIES VEHICLE MOUNT HOLSTER
8004-SVM
FOR MOTOROLA ***MC90xx, LXE MX9 gun***
DATALOGIC - ***VIPER*** INTERMEC - ***CK30***

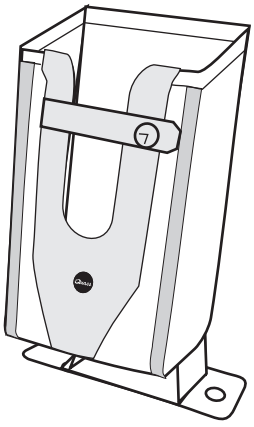

LXE MX9 GUN

VEHICLE MOUNT HOLSTER
8004-VM
FOR MOTOROLA ***MC90xx, LXE MX9 gun***
DATALOGIC - ***VIPER*** INTERMEC - ***CK30***

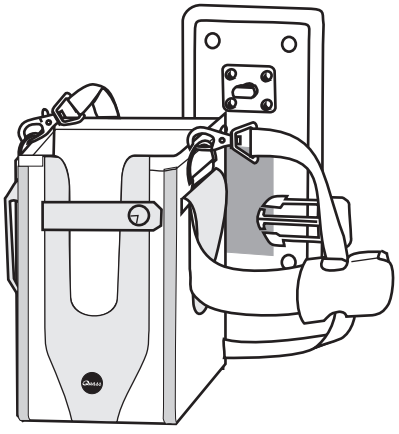

LXE MX9 GUN

HONEYWELL

DOLPHIN 6100

TERMINAL CASE

8161

FOR ***HONEYWELL*** **DOLPHIN 6100**

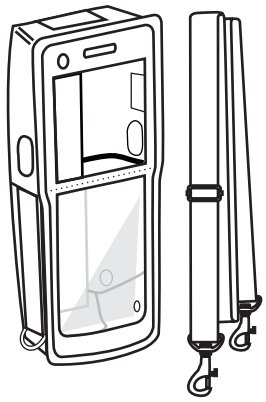

UNIVERSAL HOLSTER

8055

FOR ***HONEYWELL DOLPHIN 6100***

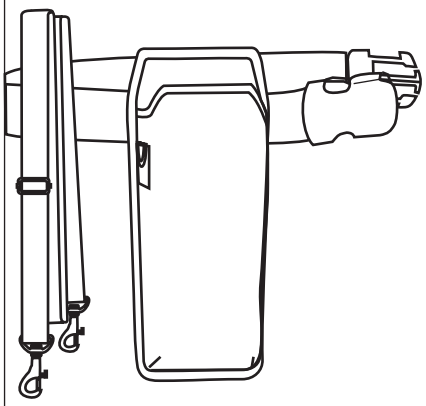

UNIVERSAL HOLSTER

8056

FOR ***HONEYWELL DOLPHIN 6100***

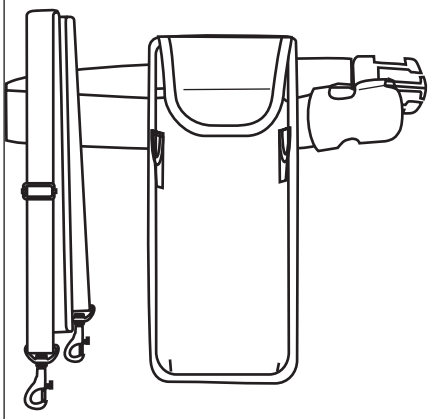

DOLPHIN 6500

TERMINAL CASE

8170

FOR ***HONEYWELL*** **DOLPHIN 6500**

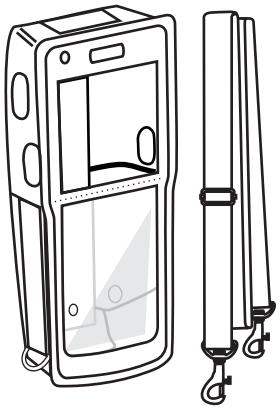

TERMINAL HOLSTER

8027-B

FOR ***INTERMEC CN3e***
HONYWELL DOLPHIN 6500
MOTOROLA MC 30XX S

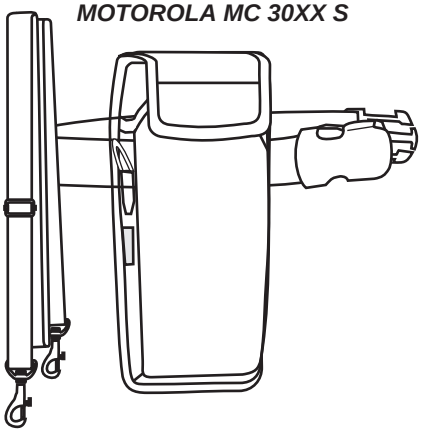

TERMINAL HOLSTER

8050

FOR ***LXE MX8***
HONEYWELL DOLPHIN 6500

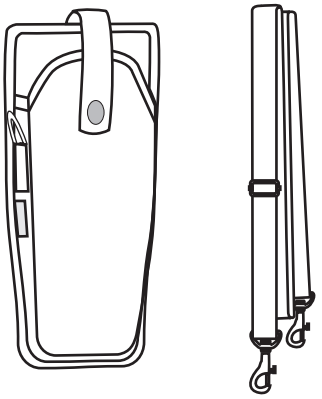

PRINTEK EXTECH

PRINTER CASE

9505

FOR ***PRINTEK MtP 400*** series

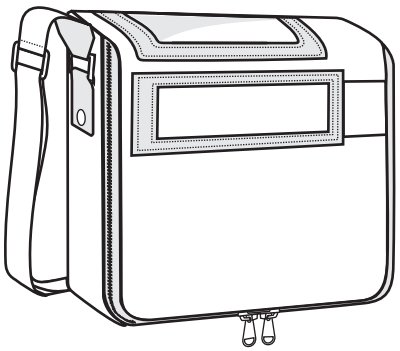

PRINTER SET CASE

9515

FOR ***PRINTEK MOBILE MtP400***
AND HANDHELD COMPUTER

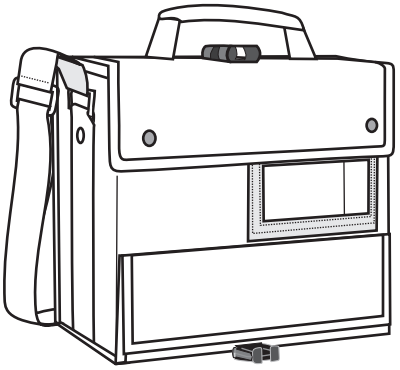

PRINTEK MtP 400

PRINTER CASE

9501

FOR ***PRINTEK FIELDPRO*** series

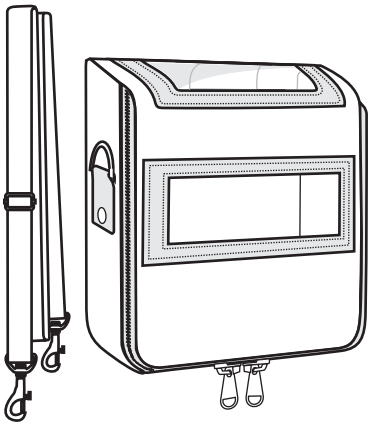

PRINTER SET CASE

9507

FOR ***PRINTEK FIELDPRO RT 43 BT***
AND HANDHELD COMPUTER

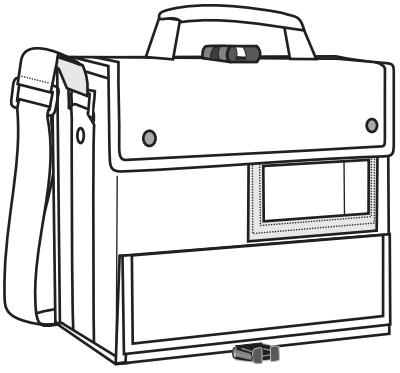

PRINTEK FIELDPRO

PRINTER CASE

9526

FOR ***ONIL - APEX4 TT USB & BT***
(EXTECH S4500 THS BT)

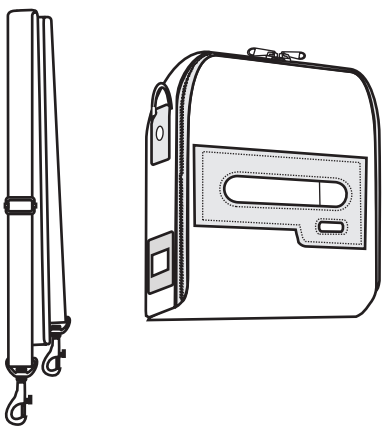

PRINTER SET CASE

9509

FOR
ONIL - APEX4 PRINTER TT,
EXTECH S4500THS
AND HANDHELD COMPUTER

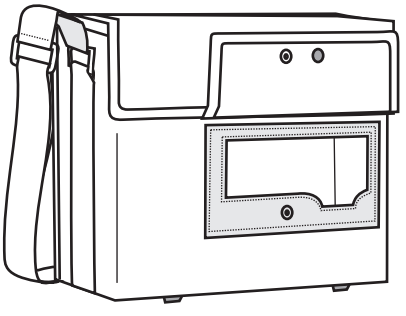

ONIL -EXTECH

ZEBRA

PRINTER CASE

9506

FOR ***ZEBRA QL420***

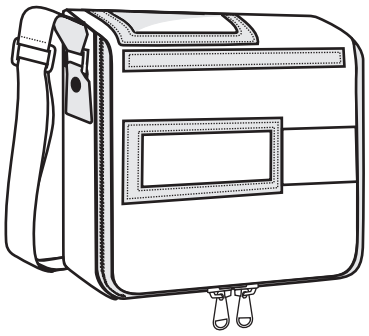

PRINTER SET CASE

9512

FOR ***ZEBRA QL420***
AND HANDHELD COMPUTER

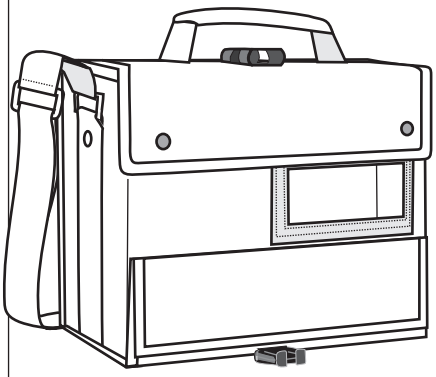

SHOULDER BAG

9513

FOR ZEBRA **QL420** PRINTER
AND HANDHELD COMPUTER

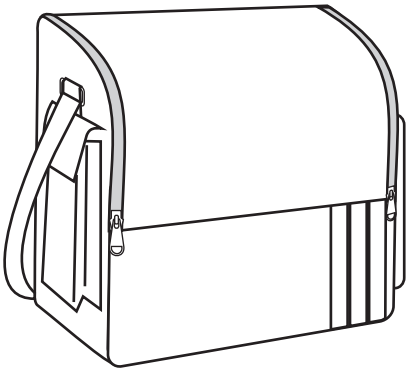

PRINTER CASE

9518

FOR ***ZEBRA RW 220***
WITH ADDITIONAL SPACE FOR EXTRA PAPER ROLLS

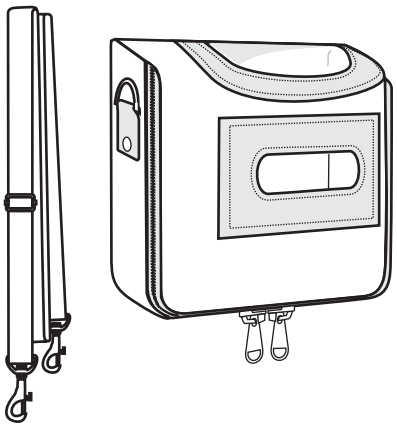

PRINTER CASE

9520

FOR ***ZEBRA RW 420***

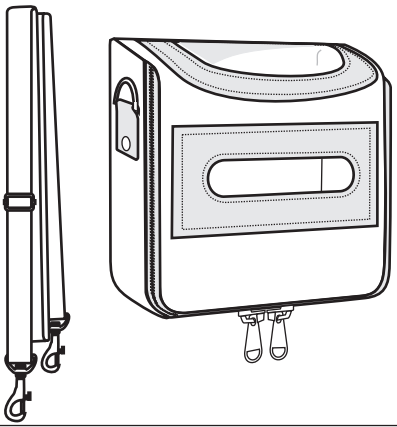

PRINTER CASE

9523

FOR ***ZEBRA P4T***

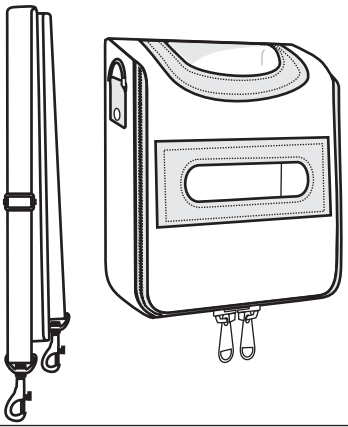

PRINTER COVER

9510

FOR ***ZEBRA Z4M, ZM400***

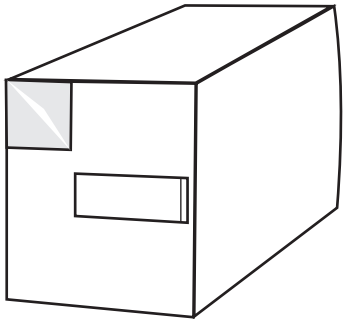

PRINTER COVER

9516

FOR ***ZEBRA ZM400***

PRINTER HEATED TERMAL COVER

9516-T Extreme

FOR ***ZEBRA ZM400***

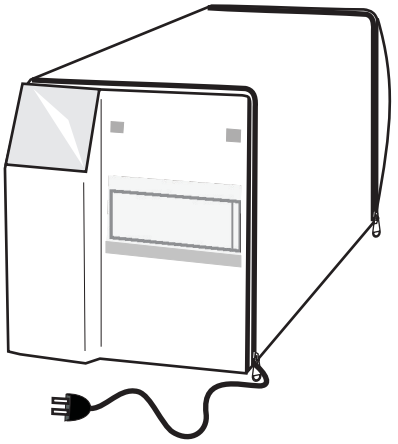

ZEBRA QL 420

ZEBRA RW 220 RW 420 P4T

ZEBRA Z4M ZM400

ZEBRA

PRINTER HEATED TERMAL COVER

9516-WT Extreme

FOR ***ZEBRA ZM400*** WITH BOTTOM WINDER

ZEBRA Z4M ZM400

PRINTER COVER

9511

FOR ***ZEBRA Z6M, ZM600***

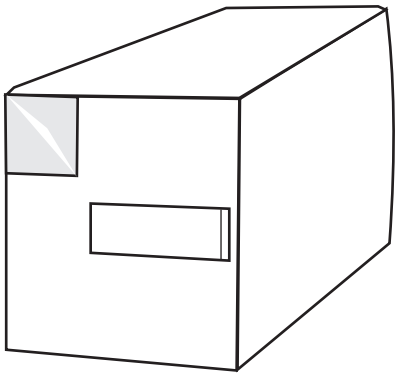

PRINTER TERMAL COVER

9514

FOR ***ZEBRA ZM600***

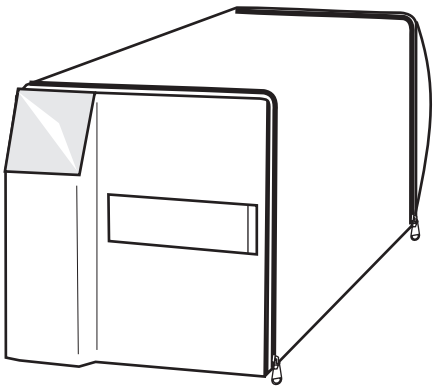

PRINTER HEATED TERMAL COVER

9514-T Extreme

FOR ***ZEBRA ZM600***

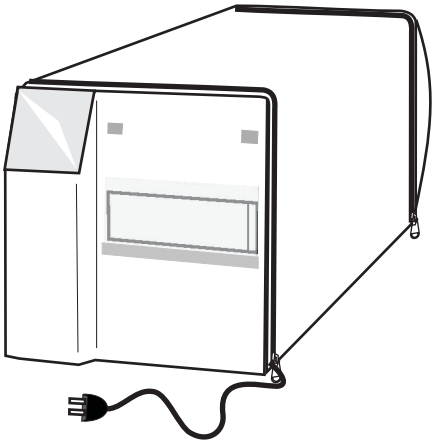

ZEBRA Z6M ZM600

PRINTER HEATED TERMAL COVER

9519-T Extreme

FOR ***ZEBRA S4M***

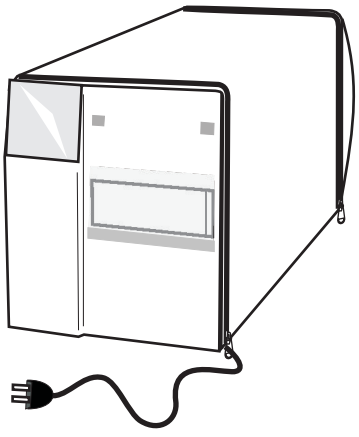

PRINTER HEATED TERMAL COVER

9521-T Extreme

FOR ***ZEBRA 110XiIII***

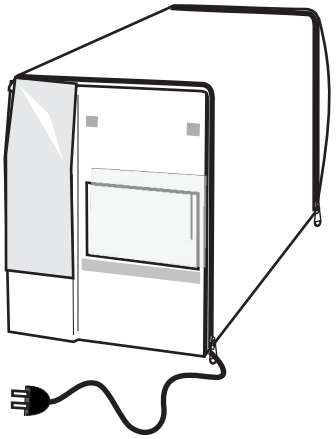

PRINTER HEATED TERMAL COVER

9527-T Extreme

FOR ***ZEBRA 170XiIII***

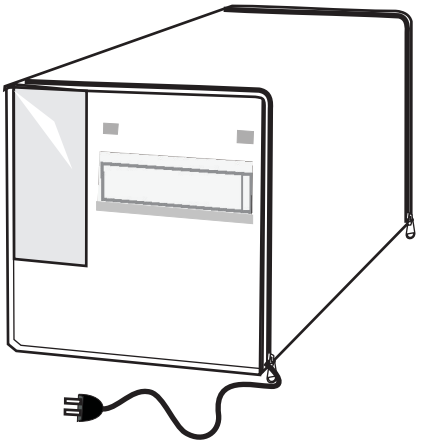

ZEBRA Z4M 110XiIII

ADDITIONAL ACCESSORIES

VEHICLE MOUNT HOLDER
2001
FOR Z - OPTION CASES

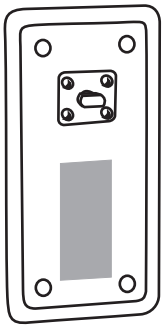

BELT HOLDER
2003
FOR Z - OPTION CASES

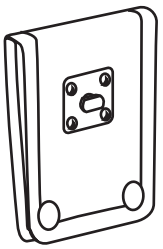

SHOULDER BELT
2004
FOR ALL TYPES OF CASES AND HOLSTERS

BELT
2005
FOR ALL TYPES HOLSTERS

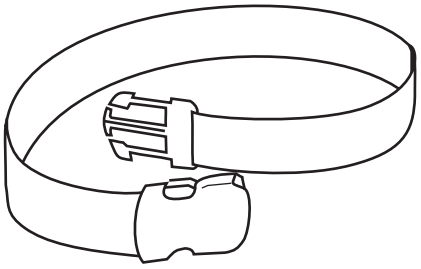

FOREARM HOLDER
2006
FOR **8146** CASE (SYMBOL WSS 1000)

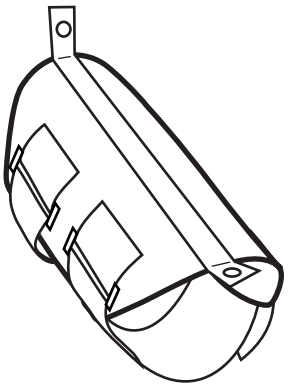

16" STRAP
2007
FOR **8146** CASE

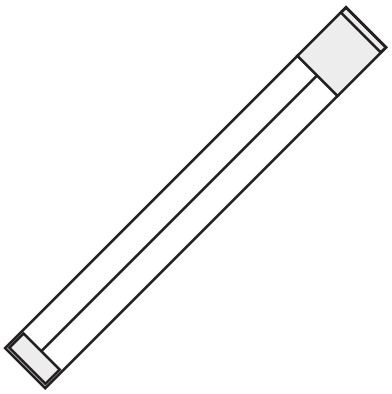

13,5" STRAP
2009
FOR **8146** CASE

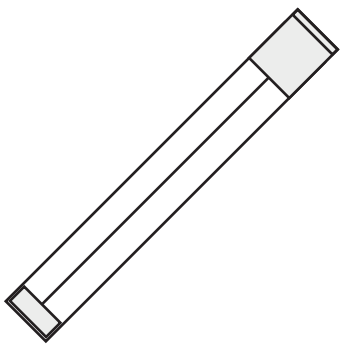

STRAPS SET (13,5", 16")
2010
FOR **8146** CASE

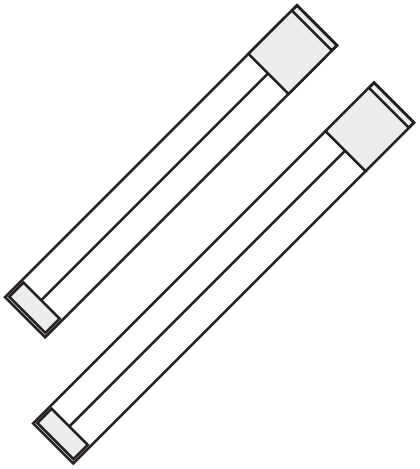

FOREARM HOLDER SET
2011
FOR **8150 / 8151** CASE
(MOTOROLA WT40xx)

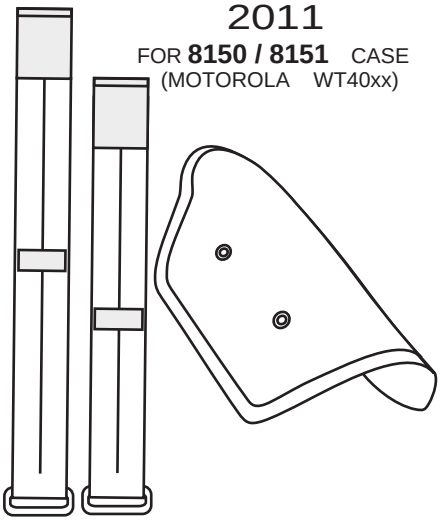

ADDITIONAL ACCESSORIES

TERMINAL LANYARD

2013

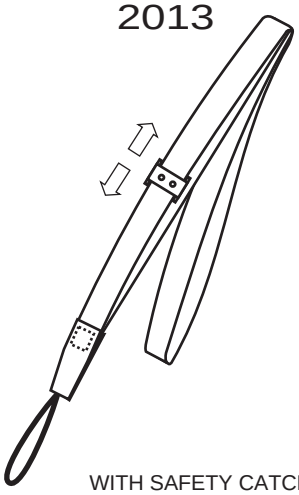

WITH SAFETY CATCH

TERMINAL LANYARD

2014

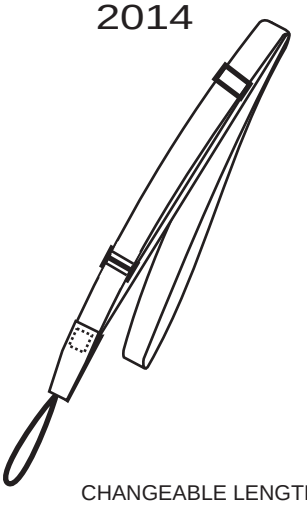

CHANGEABLE LENGTH

TERMINAL BELT

2015

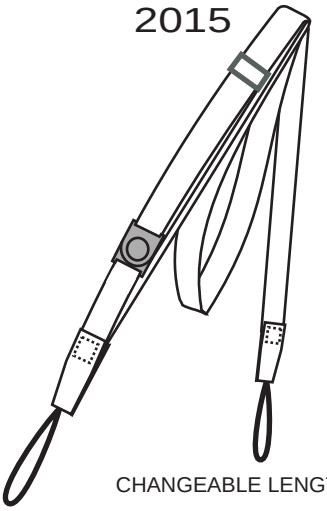

CHANGEABLE LENGTH

BELT HOLDER

2016

FOR **8110-D45ZH** CASE

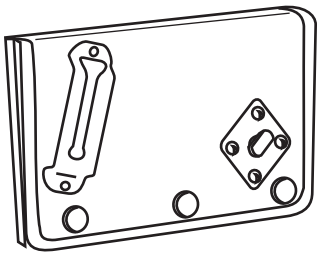

MULTIFUNCTIONAL BELT CASE

2017

FROM THE LEFT:

-PHONE POCKET with elastic sides (appx. :120 x 60 x 15 mm)
-PEN GRIP
-DOUBLE POCKET (130 X 80 X 20 mm)
-KNIFE POCKET with elastic sides (appx.: 100 X 35 X 20 mm)

PLUS:

- SNAP HOOK for keys
- SEMICIRCLE

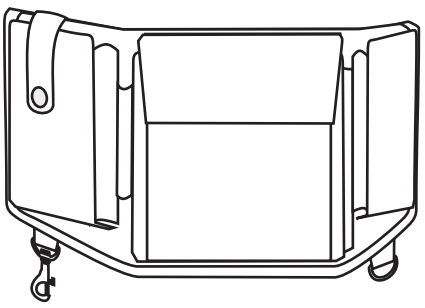

HAND STRAP

2018

FOR **MOTOROLA MC30XX**

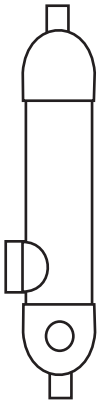

SAFETY TRANSPORTATION BAG

2019

FOR 10 HANDHEDLS - BRICK
OR 6-8 HANDHELDS - GUN

INSIDE DIMENSIONS: lenght 500 X width 190 X high 250 mm

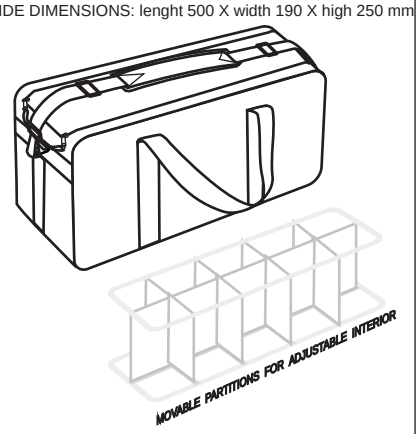

POLYCARBONATE
SCREEN PROTECTION PANE

2020

FOR ***MOTOROLA VC 5090***

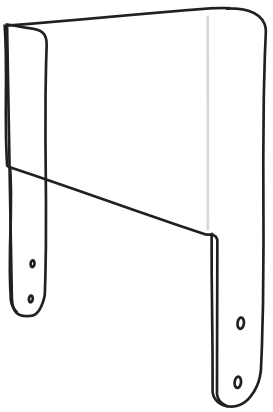

ADDITIONAL ACCESSORIES

HIP BELT STABILIZER

2021

FOR **8019** HOLSTER

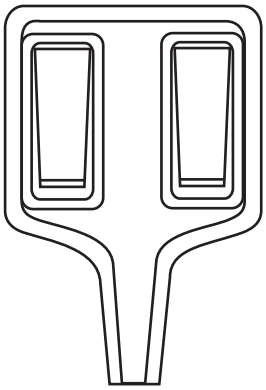

HIP BELT STABILIZER

2022

FOR **8004** HOLSTER

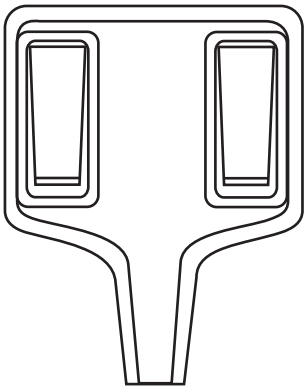

HIP BELT HOLDER

2023

FOR CASES **8150, 8151, 8158, 8159**

(UPDATING TO **B** - OPTION)

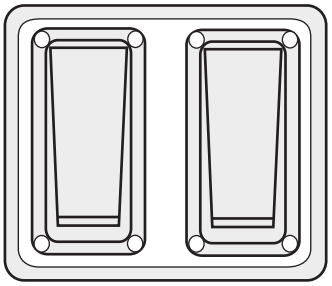

CODING SYSTEM (AVAILABLE OPTIONS FOR CASES)

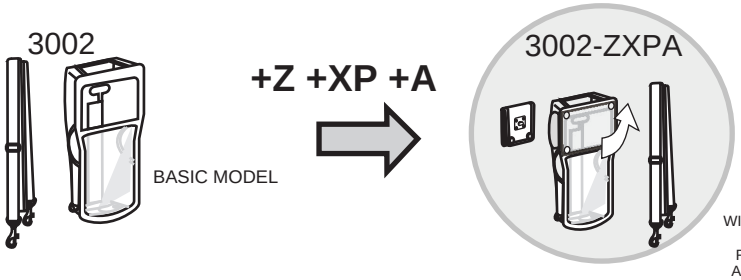

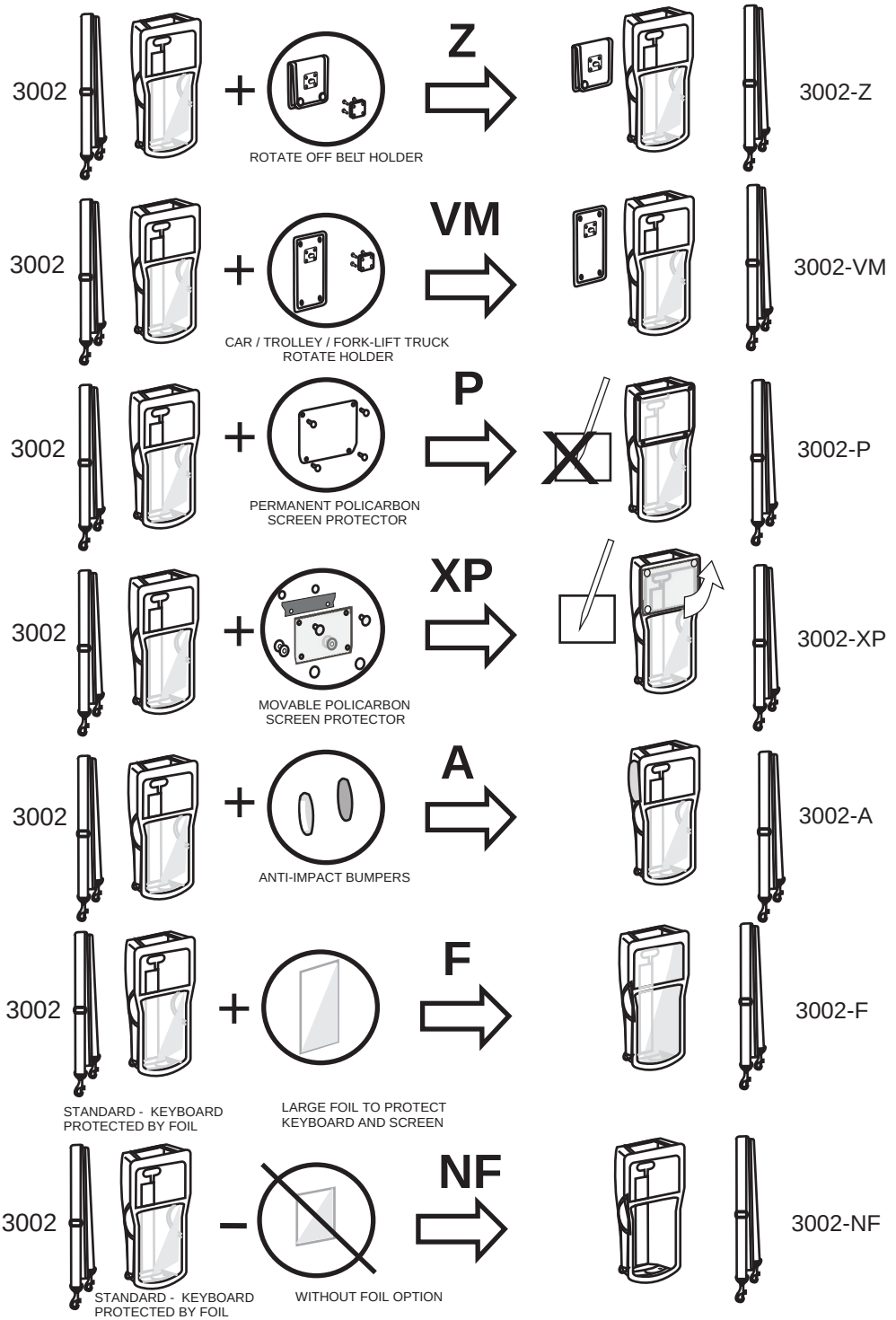

CODING SYSTEM (SPECIAL TYPES OF CASES)

D

8124- D

D-OPTION CASES ENABLES DOCKING UNITS WITH ITS CASE ON

L

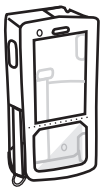

8124-LD

FULL LEATHER CASE OR HOLSTER

G

8124-G

G-OPTION CASES WITHOUT METAL PARTS

CODING SYSTEM (AVAILABLE OPTIONS FOR HOLSTERS)

8005

STANDARD - BELT LOOP OR MILITARY TAPE PLASTICK BELT HOLDER

\+

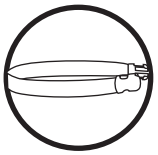

40 MM BELT

B

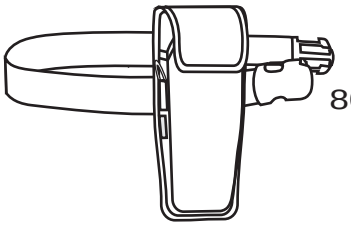

8005-B

8015

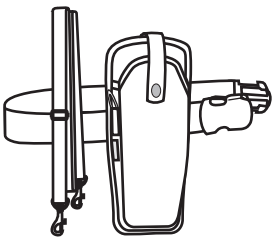

\+

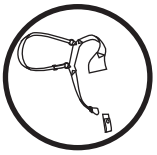

SHOULDER BELT

\-

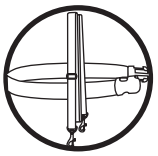

STANDARD BELTS

SH

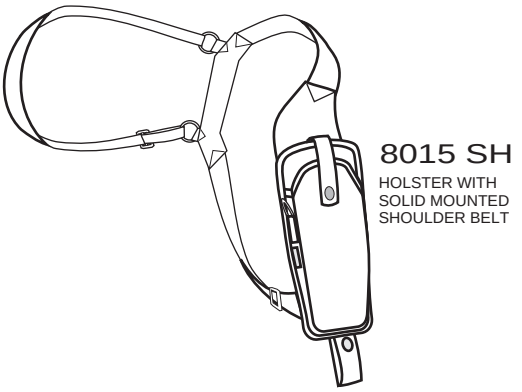

8015 SH

HOLSTER WITH SOLID MOUNTED SHOULDER BELT

8019

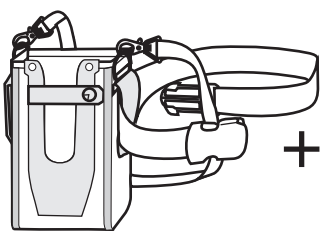

\+

METAL ANTI-RUST HANDLE FOR SOLID MOUNT

SVM

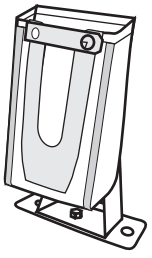

8019-SVM

www.quass7.com

Quick start guide for 8114-Z

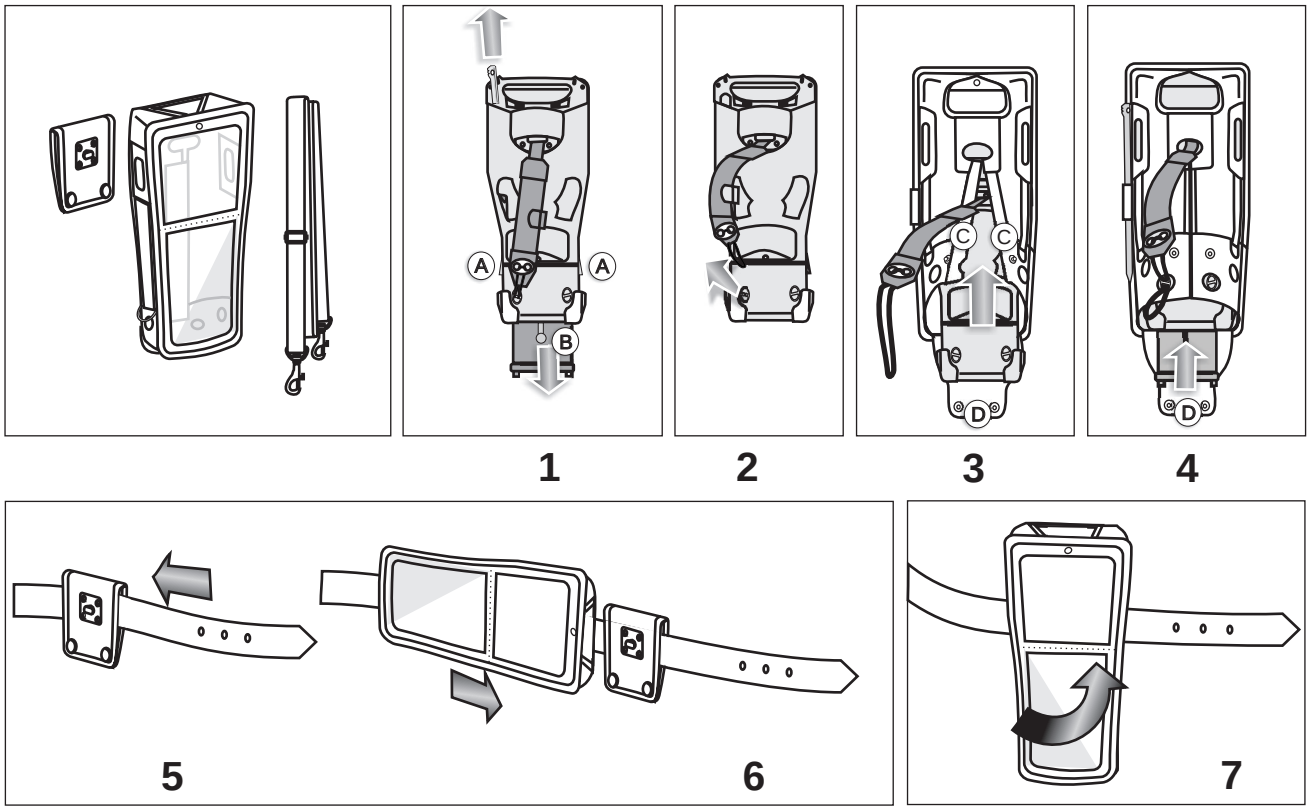

MORE MOBILITY - SVM QUASS SYSTEM

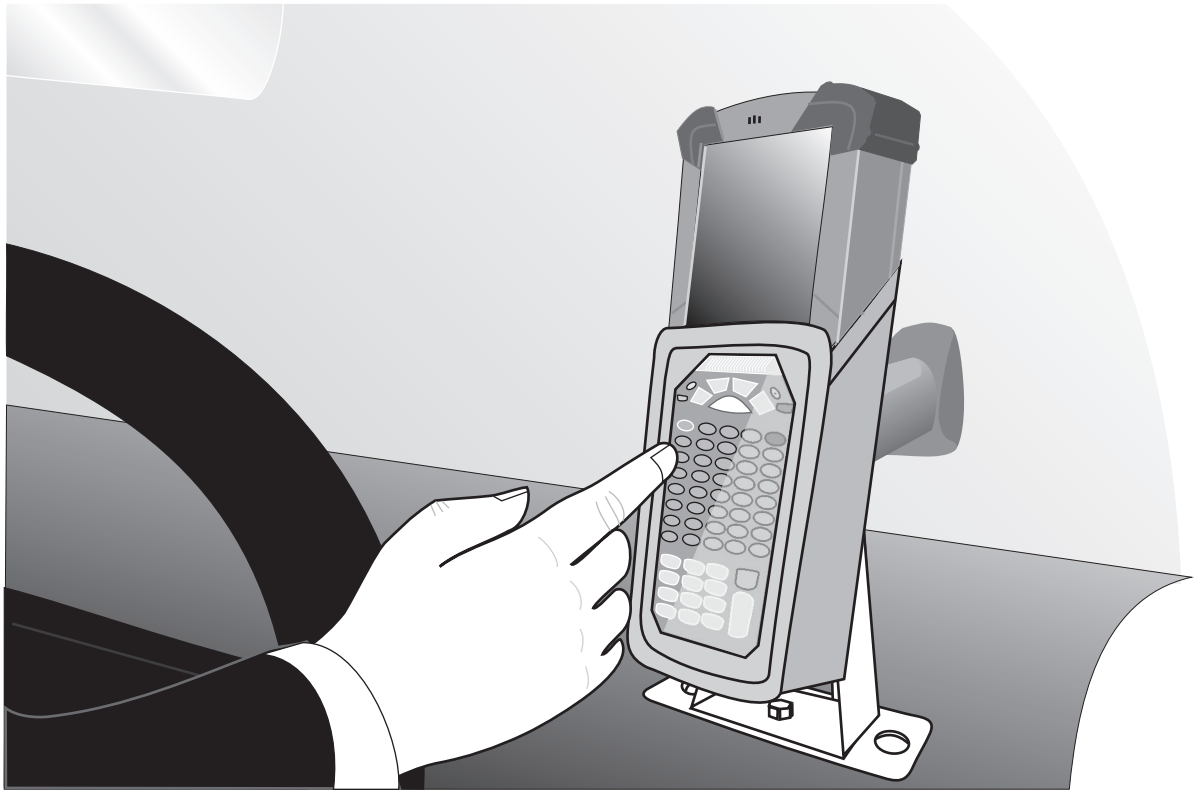

SOLID HOLDER MADE OF ANTI RUST STEEL . SOLUTION AVAILABLE FOR THE MOST OF THE HANDHELDS

3002 XPA protective case with half-drop window option (XP) and neoprene protector (A)

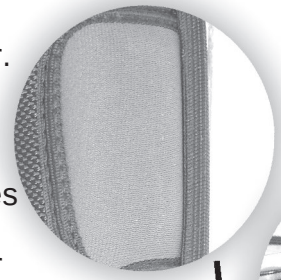

Neoprene protector. Multi-layer construction filled with polyurethane foam which provides shock protection in the area of scanner mechanism and screen. Important for scanners of 3000 series which are not equipped with rubber fenders (like in 9000 series). For scanners of 9000 series it provides additional shock protection.

Openings on the top part of the case are formed in such a way as not to hinder the use of the computer.

Half-drop window made of polycarbon protects from atmospheric conditions and scratches. It provides shock protection and thermal barrier. It limits the wear of the scanner.

Openings on both sides of the computer provide easy access to side steering keys.

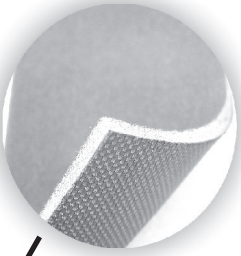

Four lining waterproof sheet protects from atmospheric conditions and scratches. It provides shock protection and thermal barrier. It limits the wear of the scanner.

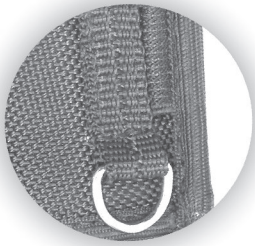

A secure and resistant fastening of the arm belt. Metallic semicircles. Arm belt is provided as standard equipment. It facilitates transportation and increases functionality of the computer.

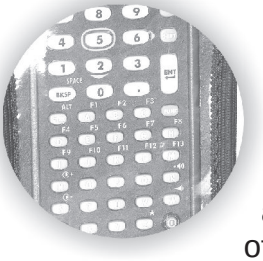

A special plastic foil resistant to changeable atmospheric conditions protets the keypad from dirt and increases its service life. A frame made of synthetic material protects keypad from accidental press of keys.

The closing system of the holster enables access to the junction and exchange of battery without the necessity of removal of the computer from the holster. The hatch is made of natural leather. Snap fasteners without nickel made by German Prym-Fiocchi. Reclosable fastener tape is made by YKK from Japan.

The closing hatch is constructed in such a way that after placing the computer in the holster it is possible to use the belt grip of the computer.

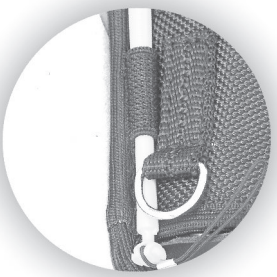

Grip for fastening of the pen of the touch-screen option

7011-Z protective case for MOTOROLA MC70 (3600 MaH battery) with rotate off grip option (Z)

A safe ROTATE OFF grip enables fastening of the computer to the belt and its transportation with freedom of movements.

Specially profiled opening on the front do not impede the work of the scanner. Antenna is fairlead.

The shape of the casing guarantees an unproblematic use of all options of the computer. The superior part uncover loudspeaker and activation key.

Openings on both sides of the computer provide easy access to side steering keys.

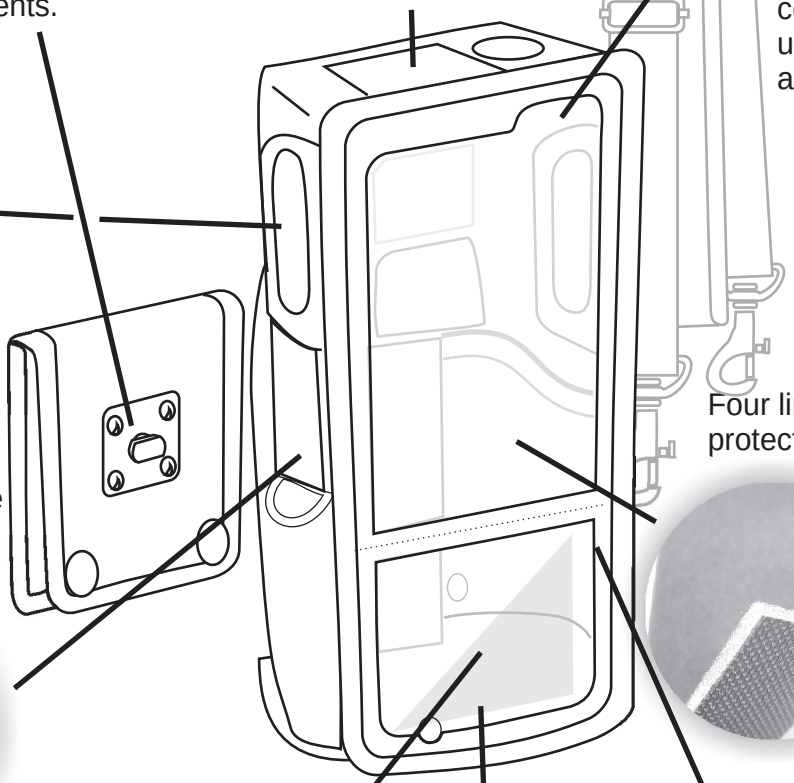

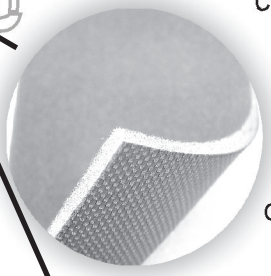

Four lining waterproof sheet protects from atmospheric conditions and scratches. It provides shock protection and thermal barrier. It limits the wear of the computer.

A secure and resistant fastening of the arm belt. Metallic semicircles. Arm belt is provided as standard equipment. It facilitates transportation and increases functionality of the computer.

Grip for fastening of the pen of the touch -screen option.

A special plastic foil resistant to changeable atmosferic conditions protects the keypad from dirt and increases its service life. A frame made of synthetic material protects keypad from accidental press of keys. An opening of the foil uncovers microphone.

The closing system of the case enables access to the junction and exchange of battery without the necessity of removal of the computer from the case. The hatch is made of natural leather. Snap fasteners without nickel made by German Prym-Fiocchi. Reclosable fastener tape is made by YKK from Japan. The closing hatch enables the use of the belt grip of the computer.

1001	page 34	case for TOHKEN THIR6000U
1002	page 34	case for TOHKEN THIR6000U
1005	page 20	protective boot for Motorola DS6708
1005-Z	page 20	protective boot for Motorola DS6708
1006	page 30	protective boot for DATALOGIC GRYPHON I
1007	page 20	protective boot for Motorola LS2208
2001	page 48	vehicle mount holder for Z-series cases
2003	page 48	belt holder for Z-series cases
2004	page 48	shoulder belt for holsters and cases
2005	page 48	belt for cases
2006	page 48	forearm holder for 8146 case (MOTOROLA WSS 1000)
2007	page 48	16” strap for 8146 case
2009	page 48	strap set for 8146 case
2010	page 48	13,5” strap for 8146 case
2011	page 48	forearm holder for 8150/8151 case (MOTOROLA WT 40xx)
2013	page 49	lanyard for handhelds, scanners
2014	page 49	lanyard for handhelds, scanners
2015	page 49	shoulder belt for handhelds, scanners
2016	page 49	belt holder for 8110-D45ZH case
2017	page 49	belt case
2018	page 49	hand strap for MOTOROLA MC 30XX brick
2019	page 49	safety transportation bag
2020	page 49	polycarbonate screen protection pane for Motorola VC 5090
2021	page 50	hip belt stabilizer for 8019 holster
2022	page 50	hip belt stabilizer for 8004 holster
2023	page 50	hip belt holder for cases: 8150,8151,8158,8159 (update to B-option)
3001	page 4	case for Motorola - Symbol MC 30xx G series (with grip)
3001-XPA	page 4	case for Motorola - Symbol MC 30xx G series (with grip)
3002	page 4	case for Motorola - Symbol MC 30xx R/S series
3002-Z	page 4	case for Motorola - Symbol MC 30xx R/S series
3002-ZP	page 5	case for Motorola - Symbol MC 30xx R/S series
3002-XP	page 5	case for Motorola - Sy,mbol MC 30xx R/S series
3002-ZXPA	page 5	case for Motorola - Symbol MC 30xx R/S series
3003-P	page 5	case for Motorola - Symbol MC 30xx R/S series
3004	page 5	case for Motorola - Symbol MC 30xx R/S series
3004-PBF	page 5	case for Motorola - Symbol MC 30xx R/S series
5001	page 35	holster for CASIO DT-X10, DT-X11
5002	page 35	holster for CASIO DT-X10, DT-X11
5003	page 35	holster for CASIO DT-X7
5004-SVM	page 36	holster for CASIO DT-X30
5005	page 37	holster for CASIO IT 800 RGC (standard/extended battery), IT800 RC (extended battery)
5006	page 37	holster for CASIO IT 800 RGC (standard/extended battery), IT800 RC (extended battery)
5101	page 36	case for CASIO CASSIOPEIA IT 600
5102-Z	page 35	case for CASIO DT-X10, DT-X11
5103-Z	page 35	case for CASIO DT-X10, DT-X11
5104	page 36	case for CASIO CASSIOPEIA IT 600
5105	page 35	case for CASIO DT-X7
5106	page 37	case for CASIO IT 3000
5107	page 36	case for CASIO DT-X30
5107-Z	page 36	case for CASIO DT-X30
5107-D	page 36	case for CASIO DT-X30
5107-DZ	page 36	case for CASIO DT-X30
5109	page 35	case for CASIO DT-X10, DT-X11
5110-iD	page 37	case for CASIO IT 800 with MICROSENSYS iID contactless
5201	page 37	shoulder bag for CASIO IT 3000
5202	page 37	shoulder bag for CASIO IT 3000
5203	page 37	shoulder bag for CASIO IT 3000
5204	page 37	shoulder bag for CASIO IT 3000
7001	page 14	case for Motorola - Symbol MC 70
7001-Z	page 14	case for Motorola - Symbol MC 70
7002	page 15	holster for Motorola - Symbol MC 70
7003	page 15	holster for Motorola - Symbol MC 70
7004-B	page 15	holster for Motorola - Symbol MC 7x series
7004-LB	page 15	holster for Motorola - Symbol MC 7x series
7005-B	page 15	holster for Motorola - Symbol MC 7x with Smart Card Reader
7011	page 14	case for Motorola - Symbol MC 70 with dual battery
7011-Z	page 14	case for Motorola - Symbol MC 70 with dual battery
7011-F	page 14	case for Motorola - Symbol MC 70 with dual battery
7011-FZ	page 14	case for Motorola - Symbol MC 70 with dual battery
7011-P	page 14	case for Motorola - Symbol MC 70 with dual battery
7012-Z	page 14	case for Motorola - Symbol MC 7094 with dual battery
7013	page 15	case for Motorola - Symbol MC 7594
7013-Z	page 15	case for Motorola - Symbol MC 7594
7014-DZ	page 15	case for Motorola - Symbol MC 7596 for vehicle single dock
7015	page 16	case for Motorola MC7594 - extended battery
8002	page 11	holster for Motorola - Symbol MC 9060 G (with grip)
8003	page 11,256	holster for Motorola - Symbol MC 9060 G (with grip), DATALOGIC VIPER
8004	page 11,21,26,43	holster for Motorola - Symbol MC 90xx G, INTERMEC CK30 INTERMEC CK 30, DATALOGIC VIPER-NET (with grip), LXE MX9 - gun

8004-M	page 11,42	holster for Motorola - Symbol MC90xx G tightly fitted, LXE MX7 gun
8004-M-SVM	page 42	holster for Motorola - Symbol MC90xx G tightly fitted, LXE MX7 gun
8004-VM	page 11,21,26,43	holster for Motorola - Symbol MC 90xx G, INTERMEC CK 30, DATALOGIC VIPER-NET (with grip), , LXE MX9 - gun- vehicle mount option
8004-SVM	page 11,21,26,43	holster for Motorola - Symbol MC 90xx G, INTERMEC CK 30, DATALOGIC VIPER-NET (with grip), , LXE MX9 - gun- 2- axies vehicle mount option
8004-SVM-R	page 11,21,26	holster for Motorola-Symbol MC 90xxG,INTERMEC CK 30, DATALOGIC VIPER-NET (with grip)- 2-axies vehicle mount option - reverse
8005	page 5	holster for Motorola - Symbol MC 30xx R series
8005-B	page 5	holster for Motorola - Symbol MC 30xx R series
8006	page 31	holster for PSC Falcon 4220 PDA
8007	page 18,31	holster for Motorola-Symbol PXXX series bar code scanners, PSC Powerscan
8007-B	page 18,31	holster for Motorola-Symbol Pxxx series bar code scanners, PSC Powerscan - with belt
8008	page 24	holster for INTERMEC CN2
8010	page 23	holster for INTERMEC CK60,CK61 (universal - with or without AA5 adapter)
8011	page 22	holster for INTERMEC CK31-gun
8012	page 23	holster for INTERMEC CK60, CK61
8013	page 9	holster for Motorola - Symbol MC 90xx S series (short)
8014	page 23	holster for INTERMEC 700
8015	page 6	holster for Motorola - Symbol MC 30xx R series
8016	page 6	holster for Motorola - Symbol MC 30xx R series
8017	page 9	holster for Motorola - Symbol MC 90xx S series (short)
8018	page 6	holster for Motorola - Symbol MC 90xx S series (brick)
8019	page 4,22,27	holster for Motorola - Symbol MC 30xx G series (with grip), DATALOGIC KYMAN (with grip), SKORPIO GUN, INTERMEC CK3
8019-pocket	page 4	holster for Motorola MC 30xx G (with grip), DATALOGIC KYMAN (with grip) SKORPIO GUN, INTERMEC CK3
8019-S-pocket	page 4	holster with belt stabilizer for Motorola MC30xx G (with grip), DATALOGIC KYMAN (with grip) SKORPIO GUN, INTERMEC CK 3
8019-M	page 4	holster for Motorola - Symbol MC 30xx G tightly fitted
8019-SVM	page 4,23,27	holster for Motorola MC30xxG, DATALOGIC KYMAN, SKORPIO GUN, INTERMEC CK3 (with grip) - 2-axies vehicle mount
8020	page 24	holster for INTERMEC CN3
8021	page 18	holster for Motorola - Symbol PPT 8800
8022	page 27	holster for DATALOGIC JET
8023	page 13	holster for Motorola - Motorola MC55/ MC 50 QWERTY 1D/2D, MC65
8024	page 12	holster for Motorola - Motorola MC5590/ MC 50 QWERTY 1D/2D
8025	page 12	holster for Motorola - Symbol MC 50 NAV 1D/2D
8026	page 12	holster for Motorola - Symbol MC 50 NAV 1D/2D
8027-B	page 6,24,44	holster for INTERMEC CN3e, Motorola MC 30XX S,HONEYWELL DOLPHIN 6500
8028	page 20,42	holster for Motorola - Symbol LS 3400, DS 3400, LXE MX8
8028-SVM	page 20,42	holster for Motorola - Symbol LS 3400, DS 3400, LXE MX8 - vehicle mount option
8029-SVM	page 11	holster for Motorola - Symbol MC 9090 G series - vehicle mount option
8030	page 39	holster for PSION-TEKLOGIX WORKABOUT PRO PDTP5S07 within CASE 8135
8031	page 18,39	holster for PSION-TEKLOGIX WORKABOUT PRO PDTP5S07, Motorola - Symbol PDT 3146
8032	page 41	holster for NORDICID PL3000
8033	page 29,41	holster for NORDICID MORPHIC, DATALOGIC MEMOR
8034	page 23	holster for INTERMEC SR 61
8034-SVM	page 23	holster for INTERMEC SR 61
8035	page 27	holster for DATALOGIC SKORPIO, JET
8036	page 30	holster for DATALOGIC PEGASO
8037	page 30	holster for DATALOGIC PEGASO
8038	page 30	holster for DATALOGIC PEGASO with grip
8039	page 17,22,36,39	holster for INTERMEC CK3, PSION WORKABOUT PRO, CASIO DT-X30, MC75XX+SCR
8040	page 22,36,39	holster for INTERMEC CK3, PSION WORKABOUT PRO, CASIO DT-X30
8040-SVM	page 22,39	holster for INTERMEC CK3, PSION WORKABOUT PRO
8041	page 28	holster for DATALOGIC KYMAN
8042	page 28	holster for DATALOGIC KYMAN
8043	page 13	holster for Motorola MC 55, MC 65
8043-C	page 13	holster for Motorola MC 55, MC 65
8044	page 33	holster for CIPHERLAB 8001
8045	page 30	holster for DATALOGIC GRYPHON I
8046	page 8,17	holster for MOTOROLA MC909X, MC75+Smart Card Reader
8046-M	page 7	holster for MOTOROLA MC909X, MC75+Smart Card Reader
8046-SVM	page 8,17	holster for MOTOROLA MC909X, MC75+Smart Card Reader
8047	page 8,17	holster for MOTOROLA MC909X, MC75+Smart Card Reader
8048	page 20	holster for MOTOROLA - Symbol PPT28XX
8049	page 8	holster for MOTOROLA MC 95XX series
8050	page 42,44	holster for LXE MX8 brick, HONEYWELL DOLPHIN 6500
8052	page 8	holster for MOTOROLA MC 95XX series
8053	page 25	holster for INTERMEC CN 50
8054	page 25	holster for INTERMEC CN 50
8055	page 44	holster for HONEYWELL DOLPHIN 6100
8055	page 44	holster for HONEYWELL DOLPHIN 6100
8057	page 20	holster for MOTOROLA - Symbol PPT20XX
8058	page 9	holster for Motorola - Symbol MC 90xx S series (short)
8059	page 13	holster for Motorola MC 5574/ MC65
8060	page 43	holster for LXE MX9 brick
8061	page 43	holster for LXE MX9 brick
8062	page 16	holster for Motorola MC 75XX
8063	page 16	holster for Motorola MC 75XX
8064	page 16	holster for Motorola MC 75XX
8065	page 16	holster for Motorola MC 75XX
8066	page 17	holster for Motorola MC 75XX with Smart Card Reader
8066-SVM	page 17	holster for Motorola MC 75XX with Smart Card Reader

8067	page 17	holster	for Motorola MC 75XX with Smart Card Reader
8068	page 29	holster	for DATALOGIC DRAGON M
8069	page 17	holster	for Motorola MC 75XX with Smart Card Reader
8070	page 32	holster	for PIDION BIP 5000 series
8071	page 32	holster	for PIDION BIP 5000 series
8072	page 25	holster	for INTERMEC SF 51
8073	page 25	holster	for INTERMEC SF 51
8074	page 25	holster	for INTERMEC SF 51
8075	page 25	holster	for INTERMEC SF 51
8076	page 40	holster	for PSION IKON
8077	page 40	holster	for PSION IKON
8078-M	page 7	holster	for Motorola MC 909X - brick
8079	page 12	holster	for Motorola MC 5590
8080	page 29	holster	for DATALOGIC MEMOR
8081	page 29	holster	for DATALOGIC MEMOR
8082	page 40	holster	for WORKABOUT PRO 3 with handle (with/without RFID)
8083	page 32	holster	for PIDION BIP-7000/7000 PLUS
8084	page 32	holster	for PIDION BIP-7000/7000 PLUS

8101	page 31	case	for PSC Falcon 4220 PDA
8103	page 31	case	for PSC Falcon 4220 PDA
8104-Z-RS	page 6	case	for Motorola - Symbol MC 9062 with RS adapter
8104-Z-RS-94	page 7	case	for Motorola MC9094 with cable adapter module
8107-Z	page 6	case	for Motorola - Symbol MC 9062
8108-Z-RS	page 6	case	for Motorola - Symbol MC 9062 with cable adaptor
8109	page 26	case	for DATALOGIC VIPER-NET
8109-XP	page 26	case	for DATALOGIC VIPER-NET
8110	page 9	case	for Motorola - Symbol MC 9060 S (short)
8110-DZH	page 9	case	for Motorola - Symbol MC 9060 S (short)
8110-D45ZH	page 9	case	for Motorola - Symbol MC 9060 S (short)
8110-NFZ	page 9	case	for Motorola - Symbol MC 9060 S (short)
8110-Z	page 9	case	for Motorola - Symbol MC 9060 S (short)
8111	page 9	case	for Motorola - Symbol MC 9060 S (short with grip)
8112	page 10	case	for Motorola - Symbol MC 9060 G (with grip)
8112-Z	page 10	case	for Motorola - Symbol MC 9060 G (with grip)
8113-Z	page 7	case	for Motorola - Symbol 9090 K (brick)
8114-Z	page 7	case	for Motorola - Symbol 9094 K (brick)
8114-DZ	page 7	case	for Motorola - Symbol 9094 K (brick) easy docking
8115	page 10	case	for Motorola - Symbol MC 9090 G (with grip)
8115-Z	page 10	case	for Motorola - Symbol MC 9090 G (with grip)
8115-F	page 10	case	for Motorola - Symbol MC 9090 G (with grip)
8115-P	page 10	case	for Motorola - Symbol MC 9090 G (with grip)
8115-XP	page 10	case	for Motorola - Symbol MC 9090 G (with grip)
8115-ZXP	page 10	case	for Motorola - Symbol MC 9090 G (with grip)
8115-VM	page 10	case	for Motorola - Symbol MC 9090 G (with grip) with no rock belt fix
8116	page 7	case	for Motorola - Symbol MC 9090 K (brick) with 28 key keyboard
8116-P	page 7	case	for Motorola - Symbol MC 9090 K (brick) with 28 key keyboard
8117	page 27	case	for DATALOGIC SKORPIO
8117-DZ	page 27	case	for DATALOGIC SKORPIO easy docking case
8118	page 22	case	for INTERMEC CK31
8119	page 28	case	for DATALOGIC MEMOR
8119-D	page 28	case	for DATALOGIC MEMOR
8120	page 18	case	for Motorola - Symbol PDT 6846
8121	page 34	case	for ARGOX PT12
8122	page 28	case	for DATALOGIC KYMAN
8123	page 26	case	for DTALOGIC VIPER DL 9600
8124	page 24	case	for INTERMEC CN3
8124-DZ	page 24	case	for INTERMEC CN3 easy docking case
8124-LD	page 24	case	for INTERMEC CN3 - leather
8124-DG	page 24	case	for INTERMEC CN3 - no metal
8125-Z	page 21	case	for INTERMEC CK30
8125-NF	page 21	case	for INTERMEC CK30
8125-O	page 21	case	for INTERMEC CK30
8126-Z	page 31	case	for PSC FALCON 345
8127-Z	page 31	case	for PSC FALCON 4420
8128	page 34	case	for OPTICON H 19A
8129	page 19	case	for Motorola - Symbol MC35
8130-D	page 23	case	for INTERMEC CK60, CK61
8130-LD	page 23	case	for INTERMEC CK60, CK61 - leather
8132-D	page 27	case	for DATALOGIC Jet
8133-D	page 24	case	for INTERMEC CN3e
8134	page 27	case	for DATALOGIC SKORPIO (with grip)
8134-D	page 27	case	for DALOGIC SKORPIO (with grip) - easy docking option
8135	page 39	case	for PSION TEKLOGIX WORKABOUT PRO PDTPS07
8136-Z	page 19	case	for MOTOROLA HC 700
8137-P	page 41	case	for NORDICID PL3000
8138-P	page 41	case	for NORDICID PL3000
8138-ANFU	page 41	case	for NORDICID PL3000
8138-AFU	page 41	case	for NORDICID PL3000
8139	page 41	case	for NORDICID MORPHIC
8140	page 41	case	for PSION TEKLOGIX WORKABOUT PRO with RS232
8141-LD	page 28	case	for DATALOGIC MEMOR
8142-L	page 41	case	for NORDICID MORPHIC
8143	page 33	case	for MOBILE COMPIA M3
8143-D	page 33	case	for MOBILE COMPIA M3
8143-XPZ	page 33	case	for MOBILE COMPIA M3
8144	page 30	case	for DATALOGIC PEGASO
8144-Z	page 30	case	for DATALOGIC PEGASO

8144-D	page 30	case for DATALOGIC PEGASO (easy docking)
8145	page 30	case for DATALOGIC PEGASO (with grip)
8146	page 19	case for Motorola-Symbol WSS 1000
8147	page 28	case for DATALOGIC MEMOR
8148	page 22	case for INTERMEC CK3
8149	page 22	case for INTERMEC CK3 (with grip)
8150	page 19	case for MOTOROLA WT 40xx series
8151	page 19	case for MOTOROLA WT 40xx (ext. Battery)
8151-B	page 19	case for MOTOROLA WT 40xx (ext. battery)
8152	page 39	case for PSION TEKLOGIX WORKABOUT PRO
8152-O	page 39	case for PSION TEKLOGIX WORKABOUT PRO
8153-O	page 33	case for CIPHERLAB 8001 (leather)
8154	page 29	case for DATALOGIC MEMOR model from the year 2009
8154-D	page 29	case for DATALOGIC MEMOR model from the year 2009
8154-O	page 29	case for DATALOGIC MEMOR model from the year 2009
8155	page 12	case for Motorola MC55, MC65
8155-Z	page 12	case for Motorola MC55, MC65
8156	page 42	case for LXE MX8 gun
8156-BF	page 42	case for LXE MX8 gun
8157	page 42	case for LXE MX8 brick
8158	page 19	case for MOTOROLA WT4090 VOW
8159	page 19	case for MOTOROLA WT4090 VOW
8159-B	page 19	case for MOTOROLA WT4090 VOW
8160	page 25	case for INTERMEC CN50
8161	page 44	case for HONEYWELL DOLPHIN 6100
8162	page 41	case for NORDICID RF 6XX series
8163	page 22	case for INTERMEC CK31 – gun
8164	page 43	case for LXE MX9 brick
8165	page 43	case for LXE MX9 gun
8166	page 32	case for PIDION BIP 5000
8166-ZXP	page 32	case for PIDION BIP 5000
8167	page 40	case for PSION IKON
8168	page 33	case for HTC
8169	page 18	case for Motorola - Symbol PDT 3146
8170	page 44	case for HONEYWELL DOLPHIN 6500
8172	page 28	case for DATALOGIC KYMAN brick
8173-DZ	page 25	case for INTERMEC CN4
8174	page 40	case for WORKABOUT PRO 3 with handle
1875	page 40	case for WORKABOUT PRO 3 RFID with handle
8176	page 32	case for PIDION BIP 7000 PLUS
8177	page 32	case for PIDION BIP 7000
8800-Z	page 18	case for Motorola - Symbol PPT 8800
9001	page 33	holster for MOBILE COMPIA M3, MC 7500S
9002	page 33	holster for MOBILE COMPIA M3, MC 7500S
9003	page 18	holster for Motorola - Symbol PDT 8100
9004	page 18	holster for Motorola - Symbol PDT 8100
9005	page 33	holster for MOBILE COMPIA M3, MC 7500S
9501	page 45	printer bag for PRINTEK FIELDPRO series
9502	page 34	shoulder bag for XPLORE tablets
9502-GP	page 34	bag with poicarbon screen protector for XPLORE tablets
9503	page 38	shoulder bag for FUJITSU-SIEMENS LIFEBOOK P 1620 tablet
9504	page 38	shoulder bag for FUJITSU-SIEMENS LIFEBOOK P 1610 tablet
9505	page 45	printer bag for PRINTEK MtP 400 series
9506	page 46	printer r bag for ZEBRA QL 420
9507	page 45	printer bag for PRINTEK FIELDPRO and HANDLED
9509	page 45	printer bag for EXTECH S4500THS and HANDHELD
9510	page 46	printer cover for ZEBRA ZM400, ZEBRA Z4M
9511	page 47	printer cover for ZEBRA ZM600, ZEBRA Z6M
9512	page 46	printer bag for ZEBRA QL 420 and handheld
9513	page 46	printer bag for ZEBRA QL 420 and handheld
9514	page 47	termal printer bag for ZEBRA ZM 600
9514-T Extr.	page 47	heated printer bag for ZEBRA ZM 600
9515	page 45	printer bag for PRINTEK MOBILE MtP 400
9516	page 46	termal printer bag for ZEBRA ZM 400
9516-T Extr.	page 46	heated printer bag for ZEBRA ZM 400
9516-WT Extr.	page 47	heated printer bag for ZEBRA ZM400 with bottom winder
9518	page 46	printer bag for ZEBRA RW 220
9519-T Extr.	pege 47	heated printer bag for ZEBRA S4M
9520	page 46	printer bag for ZEBRA RW 420
9521-T Extr.	pege 47	heated printer bag for ZEBRA 110XiIII
9523	page 46	printer bag for ZEBRA P4T
9524	page 34	shoulder bag for TWINHEAD DIGIHEAL tablet
9525	page 38	shoulder bag for MOTION F5v
9526	page 45	printer case for ONIL-APEX4 TT USB & BT
MB 8004	page 11,21	holster 8004 with metal box
VANS	page 6	set bag